LENNOX®

APPLICATION GUIDE

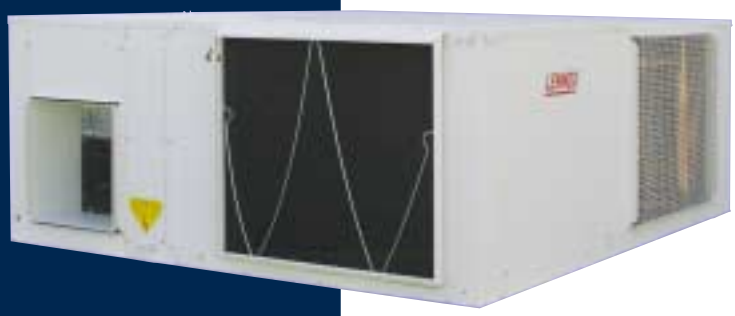

PROVIDING GLOBAL SYSTEM SOLUTIONS

FLATAIR

Congratulations you have made a wise choice and we feel sure that it will meet your expectations

INDEX

CONTENTS	PAGE
• GENERAL DESCRIPTION	2-3
. DENOMINATION	4
• PRODUCT RANGE	5
• PHYSICAL DATA	6-8
• ELECTRICAL DATA	9-10
• FAN SERVICES	11
• SOUND DATA	12
• CAPACITIES TABLE	13-19
• UNIT DIMENSIONS	20-27
• BLOWER DIMENSIONS STANDARD AND OPTIONAL	28-31
• UNIT INSTALLATION	32-33
• PIPES CONNEXIONS	
• ELECTRICAL CONNEXIONS	34
• OPERATING LIMITS	35
• OPTIONS	36
	37-28

GENERAL DESCRIPTION

The horizontal air conditionning units, range Flatair, cooling only or heat pump are air condensed units designed for small shopping center and housing. Those units have two sections: outdoors and indoors. They can be supplied either compact or on split system.
Due to their small dimensions they are designed for false ceiling and can be placed in air conducts both indoors and outdoors.
A wide range of optionals, completed-factory assembeled are also available.

FURNITURE

Painted in galvanized metal furniture, high resistant to corrosion. The units are provided with metal profils, capable of withstanding the unit and able as well of installing the unit hung from the ceilng or mounted on the floor.
The panel are easily inter exchangeable, giving several air suction and return alternatives. The outdoor sections are equiped with a metal grilles within the blower panel" except in models 24-28-30 and in the duct discharge to avoid damages(in the whole models)
An isulation with a protection of mesh is used in indoor units with a classification of M1 and F1, certifying that the material is auto-extinguishable and avoiding the fumes inside the room to be aconditionned. The auto extinguishable insulation M1 is used in indoor units.

COMPRESSORS

All units are provided with scroll compressor, cooling by a suction gas with thermical protection inside the engine, so no other additional protection is requiered. It is mounted on anti-vibration devices both external and internal.
On units 24/28/30 the compressors have a screwed connection into yhe pipe- Thus, they can be more easily to assembeld.
In heat pump units the compressors are provided with a crankcase heater to heat the oil in the compressor so that a suitable lubrification can take place.

AIR FILTER

Washable air filter; auto extinguishable material with M1 classification, high efficiency filtrate with G2 classification. It can be removed through the upper and the sizes

FAN

Outdoor and indoor fans are centrifugal with an assembled engine, statically balancing, with a low sound level.
Those fans are assembled to the inserted panel of the units and split from upper side of the fan with insulated materials to void vibrations.

EXCHANGER

Made-up with copper pipes and aluminium wings, designed to get a high heating transfer. Their dimensions and designes of the circuits have been specially worked to obtain the maximum performance of the exchanger increasing the power of the unit and reducing the consumption.

COOLING CIRCUIT

Carried out with welded deshydratable copper pipes with pressuring outlets with plugged valves in the suction and liquid lines both indoors and outdoor units.
In unit 24-28-30 the pressuring outlets in the outdoor section are approachable from the outer part of the unit.
The unit is equipped with both high-low pressure pressostats with an automatic rearm. It also has a deshydratable filter, expansion sustem with restrictors in units 10-12-16; stoppage of impurities/dirts and air reducing valves in units 22-24. The heat pump units are equipped as well with a suction pump battery to avoid the leaks to the compressor, reversible valves to reserve the cycle of unidirrectional valve.

ELECTRICAL CIRCUIT

esigned according to EN 60204-1 normative hermetically sealed to avoid condensation. With protective fuses for compressors and fans. All the engines in compressors and fans have internal thermic protectors and an electronic control plate controls the unit.

CONTROL

Made up with a printed control circuit plate for the opening unit and with a walled terminal thermostat to be placed in the room to be aconditioned; with sound output inside the terminal and with a sound installed in the outdoor batteries for the regulation of the system.
With a LCD display with alarm visualization, exclusive connection with two files between terminal thermostat and electrical box in the unit, possibility to adjust internal parameters, automatical restarting and high pressure control On/Off on units models 22-24-28-30, with well intelligent defrosting control adapted to ambient conditions in each moment and each side(for small heat pump)

FOTOGRAPHY CORRESPONDING TO A TERMINAL THERMOSTAT.

OPTIONS

- Heating electrical heater, type armoured pipe to be mounted into the unit.
- Head pressure control on/off for models 10-12-16.
- Crank case for units cooling only
- Main switch
- Phase sequencer (3 phase unit).
- Hot gas bypass valve
- Control programable controller
- Remote duct sensor on return
- Ambient remote sensor.
- Thermostatic free cooling
- Sound muffler.
- External mounting kit.
- Air filter.

RANGE PRODUCT

UNITS COOLING ONLY WITH REFRIGERANT R-407C

MODEL	OUTDOOR UNIT	INDOOR UNIT	V / Ph / 50 Hz	MOMINAL CAPACITY W	NOMINAL CONSUMPTION KW
				COOLING	COOLING
FLCK 10	KFCK 10	LFXO 10	230V/1Ph	9.800	3,69
FLCK 10	KFCK 10		230-400V/3Ph		
FLCK 12	KFCK 12	LFXO 12	230-400V/3Ph	11.800	4,58
FLCK 16	KFCK 16	LFXO 16	230-400V/3Ph	15.300	6,41
FLCK 22	KFCK 22	LFCK 22	230-400V/3Ph	19.500	8,10
FLCK 24	KFCK 24	LFCK 24	230-400V/3Ph	22.000	9,00
FLCK 28	KFCK 28	LFCK 28	230-400V/3Ph	26.300	10,38
FLCK 30	KFCK 30	LFCK 30	230-400V/3Ph	28.100	12,20

UNITS HEAT PUMP WITH REFRIGERANT R-22

MODEL	OUTDOOR UNIT	INDOOR UNIT	V / Ph / 50 Hz	NOMINAL CAPACITY W		NOMINAL CONSUMPTIONKW	
				COOLING	H.PUMP	COOLING	H.PUMP
FLHA 10	KFHA 10	LFXO 10	230V/1Ph	9.400	10.300	3,50	2,93
FLHA 10	KFHA 10		230-400V/3Ph				
FLHA 12	KFHA 12	LFXO 12	230-400V/3Ph	11.300	12.300	4,31	3,44
FLHA 16	KFHA 16	LFXO 16	230-400V/3Ph	14.700	15.600	6,11	4,94
FLHA 22	KFHA 22	LFHA 22	230-400V/3Ph	19.200	20.000	7,92	6,60
FLHA 24	KFHA 24	LFHA 24	230-400V/3Ph	21.000	22.800	8,80	7,80
FLHA 28	KFHA 28	LFHA 28	230-400V/3Ph	26.000	27.000	10,36	8,43
FLHA 30	KFHA 30	LFHA 30	230-400V/3Ph	27.600	29.800	11,78	9,43

UNITS HEAT PUMP WITH REFRIGERANT R-407C

MODEL	OUTDOOR UNIT	INDOOR UNIT	V / Ph / 50 Hz	NOMINAL CAPACITY W		NOMINAL CONSUMPTION KW	
				COOLING	H.PUMP	COOLING	H.PUMP
FLHK 10	KFHK 10	LFXO 10	230V/1Ph	9.800	10.000	3,69	3,16
FLHK 10	KFHK 10		230-400V/3Ph				
FLHK 12	KFHK 12	LFXO 12	230-400V/3Ph	11.800	12.000	4,58	4,11
FLHK 16	KFHK 16	LFXO 16	230-400V/3Ph	15.300	15.500	6,41	5,60
FLHK 22	KFHK 22	LFHK 22	230-400V/3Ph	19.500	20.200	8,10	6,74
FLHK 24	KFHK 24	LFHK 24	230-400V/3Ph	22.000	22.500	9,00	8,60
FLHK 28	KFHK 28	LFHK 28	230-400V/3Ph	26.300	27.000	10,38	9,20
FLHK 30	KFHK 30	LFHK 30	230-400V/3Ph	28.100	28.700	12,20	10,32

PHYSICAL DATA (COOLING ONLY)

R-407C

SET			FLCK 10	FLCK 12	FLCK 16	FLCK 22	FLCK 24	FLCK 28	FLCK 30
Cooling capacity	(*)	Kw	9,8	11,8	15,3	19,5	22,0	26,3	28,1
DIMENSIONS									
High		mm.	495	495	595	595	645	645	645
Wide		mm.	1250	1250	1300	1450	1500	1500	1500
Large		mm.	1250	1250	1330	1520	1800	1800	1800
NET WEIGHT		Kg	200	205	280	325	405	425	430
OUTDOOR UNIT			**KFCK 10**	**KFCK 12**	**KFCK 16**	**KFCK 22**	**KFCK 24**	**KFCK 28**	**KFCK30**
COMPRESSOR Nº / Tipo			1 / Scroll	1 / Scroll	1 / Scroll	1 / Scroll	1 / Scroll	1 / Scroll	1 / Scroll
FAN									
Max. air flow		$m^3/h.$	3500	3400	4950	5900	6600	6400	6400
Min. air flow		$m^3/h.$	2350	2400	3750	4350	4500	5000	5250
Max available pressure	(1)	Pa	100	90	120	150	160	120	100
NET WEIGHT		Kg	130	135	180	195	265	275	285
DIMENSIONS									
High		mm.	495	495	595	595	645	645	645
Wide		mm.	1250	1250	1300	1450	1500	1500	1500
Large		mm.	820	820	830	900	1025	1025	1025
PIPES CONNEXIONS									
LIQUID			3/8"	3/8"	1/2"	5/8"	5/8"	5/8"	5/8"
GAS			3/4"	3/4"	7/8"	7/8"	1-1/8"	1-1/8"	1-1/8"
INDOOR UNIT			**LFXO 10**	**LFXO 12**	**LFXO 16**	**LFCK 22**	**LFCK 24**	**LFCK 28**	**LFCK30**
FAN									
Max. air flow		$m^3/h.$	2.350	2300	3700	5.350	6300	6000	6000
Min. air flow		$m^3/h.$	1500	1650	2400	3200	4000	4250	4500
Max. available pressure	(1)	Pa	120	110	160	180	240	200	180
NET WEIGHT		Kg	70	70	100	130	140	150	150
DIMENSIONS									
High		mm.	495	495	595	595	645	645	645
Wide		mm.	1250	1250	1300	1450	1500	1500	1500
Large		mm.	430	430	500	620	775	775	775
PIPES CONNEXIONS									
LIQUID			3/8"	3/8"	1/2"	5/8"	5/8"	5/8"	5/8"
GAS			3/4"	3/4"	7/8"	7/8"	1-1/8"	1-1/8"	1-1/8"

(*) Air intake temperature in the indoor excahger: 27°C BS/19 °C BH
(*) Air intake temperature in the outdoor exchanger: 35 ºC BS

BS.- Dry bulb temperature
BH.- Wet bulb temperature

(1) With minimum air flow admisibles

PHYSICAL DATA UNITS HEAT PUMP

R-22

SET			FLHA 10	FLHA 12	FLHA 16	FLHA 22	FLHA 24	FLHA 28	FLHA 30
Cooling capacity	(*)	Kw	9,4	11,3	14,7	19,2	21,0	26,0	27,6
Heating capacity	(**)	Kw	10,3	12,3	15,6	20,0	22,8	27,0	29,8
DIMENSIONS									
High		mm.	495	495	595	595	645	645	645
Wide		mm.	1250	1250	1300	1450	1500	1500	1500
Large		mm.	1250	1250	1330	1520	1800	1800	1800
NET WEIGHT		Kg	205	210	285	330	410	430	435
OUTDOOR UNIT			**KFHA 10**	**KFHA 12**	**KFHA 16**	**KFHA 22**	**KFHA 24**	**KFHA 28**	**KFHA30**
COMPRESSOR Nº / Tipe			1 / Scroll	1 / Scroll	1 / Scroll	1 / Scroll	1 / Scroll	1 / Scroll	1 / Scroll
FAN									
Max air flow		m^3/h.	3500	3400	4950	5900	6600	6400	6400
Min air flow		m^3/h.	2350	2400	3750	4350	4500	5000	5250
Max available pressure	(1)	Pa	100	90	120	150	160	120	100
NET WEIGHT		Kg	135	140	185	200	270	280	285
DIMENSIONS									
High		mm.	495	495	595	595	645	645	645
Wide		mm.	1250	1250	1300	1450	1500	1500	1500
Large		mm.	820	820	830	900	1025	1025	1025
PIPES CONNEXIONS									
LIQUID			3/8"	3/8"	1/2"	5/8"	5/8"	5/8"	5/8"
GAS			3/4"	3/4"	7/8"	7/8"	1-1/8"	1-1/8"	1-1/8"
INDOOR UNIT			**LFXO 10**	**LFXO 12**	**LFXO 16**	**LFHA 22**	**LFHA 24**	**LFHA 28**	**LFHA30**
FAN									
Max air flow		m^3/h.	2.350	2300	3700	5.350	6300	6000	6000
Min air flow		m^3/h.	1500	1650	2400	3200	4000	4250	4500
Max available pressure	(1)	Pa	120	110	160	180	240	200	180
NET WEIGHT		Kg	70	70	100	130	140	150	150
DIMENSIONS									
High		mm.	495	495	595	595	645	645	645
Wide		mm.	1250	1250	1300	1450	1500	1500	1500
Large		mm.	430	430	500	620	775	775	775
CONEXIONES FRIGORÍFICAS									
Líquido			3/8"	3/8"	1/2"	5/8"	5/8"	5/8"	5/8"
GAS			3/4"	3/4"	7/8"	7/8"	1-1/8"	1-1/8"	1-1/8"

(*) Air intake temperatur in the indoor exchanger: 27°C BS/19 °C BH
(*) Air intake temperature in the outdoor exchanger: 35 ºC BS
(**) Air intake temperature in the indoor exchanger: 20°C BS / 12 ºC BH
(**) Air intake temperature in the outdoor exchanger: 7°C BS / 6 ºC BH

BS.- Dry bulb temperature
BH.- Wet bulb temperature
(1) With mimimum air flow admisibles

PHYSICAL DATA UNITS HEAT PUMP

R-407C

SET			FLHK 10	FLHK 12	FLHK 16	FLHK 22	FLHK 24	FLHK 28	FLHK 30
Cooling capacity	(*)	Kw	9,8	11,8	15,3	19,5	22,0	26,3	28,1
Heating capacity	(**)	Kw	10,0	12,0	15,5	20,2	22,5	27,0	28,7
DIMENSIONS									
High		mm.	495	495	595	595	645	645	645
Wide		mm.	1250	1250	1300	1450	1500	1500	1500
Large		mm.	1250	1250	1330	1520	1800	1800	1800
NET WEIGHT		Kg	205	210	285	330	410	430	435
OUTDOOR UNIT			**KFHK 10**	**KFHK 12**	**KFHK 16**	**KFHK 22**	**KFHK 24**	**KFHK 28**	**KFHK30**
COMPRESSOR Nº / Tipo			1 / Scroll	1 / Scroll	1 / Scroll	1 / Scroll	1 / Scroll	1 / Scroll	1 / Scroll
FAN									
Max. air flow		$m^3/h.$	3500	3400	4950	5900	6600	6400	6400
Min air flow		$m^3/h.$	2350	2400	3750	4350	4500	5000	5250
Max available pressure	(1)	Pa	100	90	120	150	160	120	100
NET WEIGHT		Kg	135	140	185	200	270	280	285
DIMENSIONS									
High		mm.	495	495	595	595	645	645	645
Wide		mm.	1250	1250	1300	1450	1500	1500	1500
Large		mm.	820	820	830	900	1025	1025	1025
PIPES CONNEXIONS									
LIQUID			3/8"	3/8"	1/2"	5/8"	5/8"	5/8"	5/8"
GAS			3/4"	3/4"	7/8"	7/8"	1-1/8"	1-1/8"	1-1/8"
INDOOR UNIT			**LFXO 10**	**LFXO 12**	**LFXO 16**	**LFHK 22**	**LFHK 24**	**LFHK 28**	**LFHK30**
FAN									
Max air flow		$m^3/h.$	2.350	2300	3700	5.350	6300	6000	6000
Min air flow		$m^3/h.$	1500	1650	2400	3200	4000	4250	4500
Max available pressure	(1)	Pa	120	110	160	180	240	200	180
NET WEIGHT		Kg	70	70	100	130	140	150	150
DIMENSIONS									
High		mm.	495	495	595	595	645	645	645
Wide		mm.	1250	1250	1300	1450	1500	1500	1500
Large		mm.	430	430	500	620	775	775	775
PIPES CONNEXIONS									
LIQUID			3/8"	3/8"	1/2"	5/8"	5/8"	5/8"	5/8"
GAS			3/4"	3/4"	7/8"	7/8"	1-1/8"	1-1/8"	1-1/8"

(*) Air intake temperature in the indoor exchanger: 27°C BS/19 °C BH
(*) Air intake temperature in the outdoor exchanger: 35 ºC BS
(**) Air intake temperature in the indoor exchanger: 20°C BS / 12 ºC BH
(**) Air intake temperatur in the outdoor echanger: 7°C BS / 6 ºC BH

BS.- Dry bulb temperature
BH.- Wet bulb temperature
(1) With minimum air flow admisibles

ELECTRICAL DATA

R-22

UNIT MODELS		FLHA 10	FLHA 12	FLHA 16	FLHA 22	FLHA 24	FLHA 28	FLHA 30
Voltage	V/f (50 Hz)	230V/ 1Ph						
		230V-400V/ 3Ph						
Rated absorber power								
Total power cooling cycle	Kw	3,50	4,31	6,11	7,92	8,80	10,36	11,78
Total power heat pump	Kw	2,93	3,44	4,94	6,60	7,80	8,43	9,43
Maximum current								
Intensidad total	A	24,3						
		22,4/12,9	25,0/14,4	31,7/18,3	37,2/21,5	39,8/23,0	44,0/25,4	52,0/30,0
Start up current	A	99						
		96/47	102/54	148/77	193/110	181/109	183/83	177/109

UNIT MODELS		KFHA 10	KFHA 12	KFHA 16	KFHA 22	KFHA 24	KFHA 28	KFHA 30
Voltage	V/f (50 Hz)	230V/ 1Ph						
		230V-400V/ 3Ph						
Rated absorber power								
Compressor (cooling cycle)	Kw	2,60	3,41	4,11	5,02	5,85	7,41	8,83
Compressor (heating cycle)	Kw	2,03	2,54	2,94	3,70	4,85	5,48	6,48
Outdoor fan section	Kw	0,52	0,52	1,10	1,60	1,60	1,60	1,60
Total power cooling cycle	Kw	3,12	3,93	5,21	6,62	7,45	9,01	10,43
Total power heating cycle	Kw	2,55	3,06	3,50	5,30	6,45	7,08	8,08
Maximum current								
Compressor	A	18,6						
		16,7/7,2	19,3/8,7	19,9/11,5	22,4/12,9	25,3/14,6	28,5/16,3	36,5/21,0
Outdoor fan section	A	3,1	3,1					
				4,8/2,8	7,4/4,3	8,1/4,7	8,1/4,7	8,1/4,7
Total current	A	21,7						
		19,8/10,3	22,4/11,8	24,7/14,3	29,8/17,2	33,4/19,3	36,6/21,0	44,6/25,7
Starting current	A	99						
		96/47	102/54	148/77	193/110	181/109	183/83	177/109

UNIT MODELS		LFXO 10	LFXO 12	LFXO 16	LFHA 22	LFHA 24	LFHA 28	LFHA 30
Voltage	V/f (50 Hz)	230V/ 1Ph						
		230V-400V/ 3Ph						
Nominal absorber power	Kw	0,38	0.38	0,90	1,30	1,35	1,35	1,35
Maximum current	A	2,6	2,6					
				7/4	7,4/4,3	7,4/4,3	7,4/4,3	7,4/4,3
Starting current	A	7,8	7,8					
				21/23	22/14	22/14	22/14	22/14

ELECTRICAL DATA

R-407C

UNIT MODELS		FLCK 10 FLHK 10	FLCK 12 FLHK 12	FLCK 16 FLHK 16	FLCK 22 FLHK 22	FLCK 24 FLHK 24	FLCK 28 FLHK 28	FLCK 30 FLHK 30
Voltage	V/f (50 Hz)	230V/ 1Ph						
		230V-400V/ 3Ph						
Total power cooling cycle	Kw	3,69	4,58	6,41	8,10	9,00	10,38	12,20
Total power heating cycle	Kw	3,16	4,11	5,60	6,74	8,60	9,20	10,32
Maximum current								
Maximum current	A	24,3						
		22,4/12,9	25,0/14,4	31,7/18,3	37,2/21,5	39,8/23,0	44,0/25,4	52,0/30,0
Starting current	A	99						
		96/47	102/54	148/77	193/110	181/109	183/83	177/109

UNIT MODELS		KFCK 10 KFHK 10	KFCK 12 KFHK 12	KFCK 16 KFHK 16	KFCK 22 KFHK 22	KFCK 24 KFHK 24	KFCK 28 KFHK 28	KFCK 30 KFHK 30
Voltage	V/f (50 Hz)	230V/ 1Ph						
		230V-400V/ 3Ph						
Rated absorber power								
Compressor (cooling cycle)	Kw	2,79	3,68	4,41	5,20	6,05	7,43	9,25
Compressor (Heating cycle)	Kw	2,26	3,21	3,60	3,84	5,65	6,25	7,37
Outdoor fan section	Kw	0,52	0,52	1,10	1,60	1,60	1,60	1,60
Total power cooling cycle	Kw	3,31	4,20	5,51	6,80	7,65	9,03	10,85
Total power heating cycle	Kw	2,78	3,73	4,70	5,44	7,25	7,85	8,97
Maximum current								
Compressor	A	18,6						
		16,7/7,2	19,3/8,7	19,9/11,5	22,4/12,9	25,3/14,6	28,5/16,3	36,5/21,0
Out door fan section	A	3,1	3,1					
				4,8/2,8	7,4/4,3	8,1/4,7	8,1/4,7	8,1/4,7
Maximum current	A	21,7						
		19,8/10,3	22,4/11,8	24,7/14,3	29,8/17,2	33,4/19,3	36,6/21,0	44,6/25,7
Starting current	A	99						
		96/47	102/54	148/77	193/110	181/109	183/83	177/109

UNIT MODELS		LFXO 10	LFXO 12	LFXO 16	LFCK 22 LFHK 22	LFCK 24 LFHK 24	LFCK 28 LFHK 28	LFCK 30 LFHK 30
Voltage	V/f (50 Hz)	230V/ 1Ph						
		230V-400V/ 3Ph						
Rated absorber power	Kw	0,38	0.38	0,90	1,30	1,35	1,35	1,35
Maximum current	A	2,6	2,6					
				7/4	7,4/4,3	7,4/4,3	7,4/4,3	7,4/4,3
Starting current	A	7,8	7,8					
				21/23	22/14	22/14	22/14	22/14

INDOOR UNITS

NOMINAL FLOW

AVAILABLE SATTIC PRESSURE Pa.	AIR FLOW m³/h						
MODELS	10	12	16	22	24	28	30
0	2350	2300	3700	5350	6300	6000	6000
10	2275	2250	3625	5200	6225	5925	5925
20	2240	2200	3550	5090	6140	5860	5860
30	2190	2150	3475	4960	6100	5800	5800
40	2140	2100	3400	4850	6010	5725	5725
50	2080	2040	3320	4725	5930	5650	5650
60	2025	1975	3240	4610	5875	5600	5600
70	1975	1925	3160	4505	5790	5510	5510
80	1925	1860	3090	4400	5710	5440	5440
90	1840	1800	3000	4300	5620	5350	5350
100	1775	1730	2915	4160	5540	5275	5275
110	1625	1650	2825	4040	5450	5190	5190
120	1500	---	2750	3925	5350	5100	5100
130	---	---	2670	3800	5320	5000	5000
140	---	---	2580	3700	5150	4910	4910
160	---	---	2400	3525	4940	4700	4700
180	---	---	---	3200	4700	4500	4500
200	---	---	---	---	4425	4250	---
220	---	---	---	---	4175	---	---
240	---	---	---	---	4000	---	---

OUTDOOR UNITS

NOMINAL FLOW

AVAILABLE STATIC PRESSURE Pa.	AIR FLOW m³/h						
MODELOS	10	12	16	22	24	28	30
0	3500	3400	4950	5900	6600	6400	6400
10	3410	3325	4850	5800	6490	6300	6300
20	3300	3160	4750	5700	6340	6200	6200
30	3190	3075	4625	5600	6225	6100	6100
40	3080	2980	4525	5495	6100	5980	5980
50	2970	2890	4425	5390	5960	5870	5870
60	2840	2790	4325	5280	5850	5725	5725
70	2700	2690	4225	5180	5710	5600	5600
80	2560	2580	4125	5075	5600	5490	5490
90	2410	2400	4040	4975	5480	5375	5375
100	2350	---	3940	4875	5350	5250	5250
110	---	---	3840	4775	5200	5100	---
120	---	---	3750	4675	5090	5000	---
130	---	---	---	4575	4950	---	---
140	---	---	---	4460	4800	---	---
150	---	---	---	4350	4650	---	---
160	---	---	---	---	4500	---	---

NOTE:

Keep in mind reduction on air flow and static pressure services if you use mufflers or external air filter. (See: page 38 fan services)

SOUND LEVEL IN INDOOR UNITS

UNIT MODELS		LFXO 10	LFXO 12	LFXO 16	LFCK 22 LFHK 22 LFHA 22	LFCK 24 LFHK 24 LFHA 24	LFCK 28 LFHK 28 LFHA 28	LFCK 30 LFHK 30 LFHA 30
Sound pressure level (Lp) (*)	**dBA**	49	48	49	57	59	56	55

(*)Sound pressure level estimated, radiated by indoor unit fans on site with normal acoustic absorbtion, measured to a discharged distance of 2m of the unit depending on suction or discharge.

SOUND LEVEL OUTDOORS UNITS

UNIT MODELS		KFCK 10 KFHK 10 KFHA 10	KFCK 12 KFHK 12 KFHA 12	KFCK 16 KFHK 16 KFHA 16	KFCK 22 KFHK 22 KFHA 22	KFCK 24 KFHK 24 KFHA 24	KFCK 28 KFHK 28 KFHA 28	KFCK 30 KFHK 30 KFHA 30
Sound pressure level (Lp) (*)	**dBA**	43	43	45	49	49	48	48

(*) Measured in free field condition at a distance of 10m(depending on suction or in duct discharge)

SOUND LEVEL OUTDOOR UNIT+ MUFFLER(OPTIONAL)

UNIT MODELS		KFCK 16 KFHK 16 KFHA 16	KFCK 22 KFHK 22 KFHA 22	KFCK 24 KFHK 24 KFHA 24	KFCK 28 KFHK 28 KFHA 28	KFCK 30 KFHK 30 KFHA 30
Sound pressure level (Lp) (*)	**dBA**	43	45	45	45	45

(*) Setting a muffler(optional) directly connected to the discharge of outdoor fan of the unit measured in free-field condition at a distance of 10 m.(depending on no suction and discharge installation duct)

COOLING CAPACITIES

R-407C

TEMPERATURA ENTRADA AIRE UNIDAD INTERIOR		CAPACIDAD FRIGORIFICA EN kW	FLCK 10 TEMPERATURA ENTRADA AIRE A LA UNIDADEXTERIOR ºC BULBO SECO					FLCK 12 TEMPERATURA ENTRADA AIRE A LA UNIDADEXTERIOR ºC BULBO SECO				
			25°C	30°C	35°C	40°C	45°C	25°C	30°C	35°C	40°C	45°C
21°C	BS	TOTAL	9,20	8,89	8,56	8,19	7,77	10,99	10,62	10,22	9,77	9,27
15°C	BH	SENSIBLE	7,08	6,93	6,77	6,59	6,40	7,98	7,79	7,59	7,37	7,12
24°C	BS	TOTAL	9,89	9,56	9,20	8,81	8,36	11,79	11,39	10,96	10,49	9,95
17°C	BH	SENSIBLE	7,59	7,44	7,28	7,10	6,90	8,50	8,31	8,11	7,88	7,63
27°C	BS	TOTAL	10,62	10,27	9,80	9,46	8,98	12,64	12,22	11,80	11,25	10,67
19°C	BH	SENSIBLE	8,08	7,93	7,70	7,59	7,39	9,00	8,81	8,64	8,38	8,12
29°C	BS	TOTAL	11,40	11,02	10,61	10,15	9,63	13,56	13,11	12,61	12,06	11,43
21°C	BH	SENSIBLE	8,07	7,92	7,76	7,57	7,37	8,99	8,80	8,59	8,36	8,10
32°C	BS	TOTAL	12,22	11,82	11,38	10,88	10,31	14,54	14,05	13,52	12,93	---
23°C	BH	SENSIBLE	8,54	8,38	8,22	8,04	7,86	9,46	9,27	9,06	8,83	---

TEMPERATURA ENTRADA AIRE UNIDAD INTERIOR		CAPACIDAD FRIGORIFICA EN kW	FLCK 16 TEMPERATURA ENTRADA AIRE A LA UNIDADEXTERIOR ºC BULBO SECO					FLCK 22 TEMPERATURA ENTRADA AIRE A LA UNIDADEXTERIOR ºC BULBO SECO				
			25°C	30°C	35°C	40°C	45°C	25°C	30°C	35°C	40°C	45°C
21°C	BS	TOTAL	14,24	13,72	13,17	12,59	11,96	17,99	17,36	16,69	15,96	15,16
15°C	BH	SENSIBLE	10,96	10,71	10,45	10,17	9,87	14,58	14,28	13,97	13,63	13,27
24°C	BS	TOTAL	15,34	14,78	14,20	13,57	12,90	19,40	18,74	18,03	17,25	16,39
17°C	BH	SENSIBLE	11,77	11,52	11,25	10,97	10,68	15,74	15,45	15,13	14,79	14,42
27°C	BS	TOTAL	16,50	15,92	15,30	14,62	13,89	20,92	20,22	19,50	18,63	17,71
19°C	BH	SENSIBLE	12,55	12,30	12,04	11,75	11,45	16,86	16,57	16,30	15,92	15,54
29°C	BS	TOTAL	17,75	17,13	16,46	15,74	14,96	22,56	21,81	21,00	20,11	19,13
21°C	BH	SENSIBLE	12,55	12,30	12,03	11,75	11,44	16,87	16,58	16,26	15,92	15,55
32°C	BS	TOTAL	19,07	18,41	17,70	16,93	---	24,31	23,51	22,64	21,69	20,63
23°C	BH	SENSIBLE	13,28	13,03	12,77	12,48	---	17,95	17,65	17,34	17,00	16,62

TEMPERATURA ENTRADA AIRE UNIDAD INTERIOR		CAPACIDAD FRIGORIFICA EN kW	FLCK 24 TEMPERATURA ENTRADA AIRE A LA UNIDADEXTERIOR ºC BULBO SECO					FLCK 28 TEMPERATURA ENTRADA AIRE A LA UNIDADEXTERIOR ºC BULBO SECO				
			25°C	30°C	35°C	40°C	45°C	25°C	30°C	35°C	40°C	45°C
21°C	BS	TOTAL	20,62	19,87	19,09	18,28	17,43	24,63	23,71	22,77	21,80	20,81
15°C	BH	SENSIBLE	16,37	16,01	15,64	15,26	14,87	19,08	18,64	18,19	17,73	17,26
24°C	BS	TOTAL	22,19	21,39	20,56	19,69	18,79	26,45	25,48	24,48	23,45	22,39
17°C	BH	SENSIBLE	17,62	17,26	16,89	16,51	16,11	20,47	20,03	19,57	19,11	18,65
27°C	BS	TOTAL	23,88	23,02	22,00	21,21	20,25	28,40	27,37	26,30	25,21	24,08
19°C	BH	SENSIBLE	18,33	18,47	18,00	17,72	17,32	21,81	21,37	20,92	20,46	19,99
29°C	BS	TOTAL	25,20	24,78	23,83	22,85	21,82	30,50	29,40	28,26	27,10	---
21°C	BH	SENSIBLE	18,82	18,46	18,09	17,71	17,31	21,78	21,34	20,89	20,43	---
32°C	BS	TOTAL	27,65	26,67	25,65	24,59	23,50	32,73	31,56	30,35	29,11	---
23°C	BH	SENSIBLE	19,98	19,62	19,25	18,87	18,47	23,06	22,62	22,11	21,71	---

BS -Dry bulb
BH - Wet bulb

COOLING CAPACITIES

R-407C

FLCK 30

TEMPERATURA ENTRADA AIRE UNIDAD INTERIOR		CAPACIDAD FRIGORIFICA EN kW	TEMPERATURA ENTRADA AIRE A LA UNIDADEXTERIOR ºC BULBO SECO				
			25°C	30°C	35°C	40°C	45°C
21°C	BS	TOTAL	26,37	25,39	24,39	23,35	22,29
15°C	BH	SENSIBLE	20,08	19,60	19,12	18,62	18,12
24°C	BS	TOTAL	28,30	27,25	26,18	25,08	---
17°C	BH	SENSIBLE	21,50	21,02	20,53	20,03	---
27°C	BS	TOTAL	30,36	29,25	28,10	26,93	---
19°C	BH	SENSIBLE	22,86	22,38	21,89	21,40	---
29°C	BS	TOTAL	32,57	31,39	30,18	28,92	---
21°C	BH	SENSIBLE	22,83	22,35	21,86	21,36	---
32°C	BS	TOTAL	34,93	33,67	32,37	31,03	---
23°C	BH	SENSIBLE	24,13	23,65	23,13	22,66	---

BS - Dry bulb
BH - Wet bulb

CÁLCULATION OF COOLING CAPACITY DEPENDING ON AIR FLOW

CORRECTION COEFFICIENT TO FIX TO THE CAPACITY OF DIFFERENT FANS AIR FLOW

MODELS 10-12-16-22			
Air flow	min	nominal	max.
Cooling capacity	x0,97	x1,00	x1,01
sensible capacity	x0,90	x1,00	x1,03

MODELS 24-28-30			
Air flow	min.	nominal	max.
Cooling capacity	x0,98	x1,00	x1,01
Sensible capacity	x0,95	x1,00	x1,02

CORRECTION COEFFICIENT TO FIX TO THE CAPACITY OF DIFFERENT OUTDOOR AIR FLOW.

MODELS 10-12-16-22			
Air flow	min	nominal	max
Cooling capacity	x0,97	x1,00	x1,01
sensible Capacity	x0,97	x1,00	x1,01

MODELS 24-28-30			
Air flow	min	nominal	max
Cooiling capacity	x0,98	x1,00	x1,01
Capacidad sensible	x0,98	x1,00	x1,01

COOLING CAPACITIES

R-22

TEMPERATURA ENTRADA AIRE UNIDAD INTERIOR		CAPACIDAD FRIGORIFICA EN kW	FLHA 10 TEMPERATURA ENTRADA AIRE A LA UNIDADEXTERIOR ºC BULBO SECO					FLHA 12 TEMPERATURA ENTRADA AIRE A LA UNIDADEXTERIOR ºC BULBO SECO				
			25°C	30°C	35°C	40°C	45°C	25°C	30°C	35°C	40°C	45°C
21°C	BS	TOTAL	8,73	8,46	8,18	7,88	7,55	10,60	10,27	9,92	9,52	9,07
15°C	BH	SENSIBLE	6,82	6,69	6,56	6,42	6,26	7,81	7,65	7,47	7,28	7,06
24°C	BS	TOTAL	9,34	9,06	8,76	8,44	8,10	11,33	10,99	10,61	10,18	9,69
17°C	BH	SENSIBLE	7,31	7,18	7,05	6,90	6,75	8,32	8,15	7,97	7,78	7,55
27°C	BS	TOTAL	9,99	9,69	9,40	9,03	8,67	12,12	11,75	11,30	10,89	10,35
19°C	BH	SENSIBLE	7,78	7,65	7,52	7,37	7,22	8,80	8,64	8,46	8,26	8,03
29°C	BS	TOTAL	10,69	10,37	10,03	9,67	9,28	12,96	12,57	12,13	11,63	11,05
21°C	BH	SENSIBLE	7,75	7,62	7,49	7,35	7,20	8,77	8,61	8,43	8,22	7,99
32°C	BS	TOTAL	11,42	11,08	10,71	10,33	9,92	13,86	13,43	12,96	12,42	11,78
23°C	BH	SENSIBLE	8,19	8,07	7,93	7,79	7,64	9,23	9,06	8,88	8,67	8,43

TEMPERATURA ENTRADA AIRE UNIDAD INTERIOR		CAPACIDAD FRIGORIFICA EN kW	FLHA 16 TEMPERATURA ENTRADA AIRE A LA UNIDADEXTERIOR ºC BULBO SECO					FLHA 22 TEMPERATURA ENTRADA AIRE A LA UNIDADEXTERIOR ºC BULBO SECO				
			25°C	30°C	35°C	40°C	45°C	25°C	30°C	35°C	40°C	45°C
21°C	BS	TOTAL	13,56	13,11	12,62	12,09	11,50	17,62	17,09	16,50	15,85	15,08
15°C	BH	SENSIBLE	10,48	10,27	10,04	9,78	9,50	14,35	14,10	13,82	13,52	13,17
24°C	BS	TOTAL	14,54	14,06	13,55	12,98	12,35	18,91	18,35	17,74	17,04	16,21
17°C	BH	SENSIBLE	11,23	11,02	10,79	10,53	10,26	15,45	15,21	14,94	14,63	14,28
27°C	BS	TOTAL	15,58	15,07	14,70	13,93	13,26	20,26	19,69	19,20	18,30	17,40
19°C	BH	SENSIBLE	11,96	11,74	11,51	11,26	10,98	16,51	16,28	16,01	15,71	15,34
29°C	BS	TOTAL	16,69	16,15	15,57	14,93	14,23	21,71	21,11	20,43	19,64	18,63
21°C	BH	SENSIBLE	11,92	11,71	11,48	11,23	10,95	16,46	16,23	15,97	15,66	15,28
32°C	BS	TOTAL	17,86	17,28	16,66	15,99	15,24	22,22	22,60	21,88	21,02	19,86
23°C	BH	SENSIBLE	12,61	12,39	12,16	11,91	11,64	17,46	17,24	16,98	16,67	16,26

TEMPERATURA ENTRADA AIRE UNIDAD INTERIOR		CAPACIDAD FRIGORIFICA EN kW	FLHA 24 TEMPERATURA ENTRADA AIRE A LA UNIDADEXTERIOR ºC BULBO SECO					FLHA 28 TEMPERATURA ENTRADA AIRE A LA UNIDADEXTERIOR ºC BULBO SECO				
			25°C	30°C	35°C	40°C	45°C	25°C	30°C	35°C	40°C	45°C
21°C	BS	TOTAL	19,56	18,94	18,32	17,68	17,02	24,36	23,69	22,77	21,88	20,92
15°C	BH	SENSIBLE	15,75	15,46	15,16	14,87	14,56	18,96	18,59	18,20	17,78	17,33
24°C	BS	TOTAL	20,98	20,33	19,66	18,98	18,29	26,07	25,24	24,36	23,41	22,38
17°C	BH	SENSIBLE	16,94	16,65	16,36	16,06	15,76	20,31	19,94	19,54	19,12	18,66
27°C	BS	TOTAL	22,50	21,81	21,00	20,39	19,65	27,88	26,99	26,00	25,03	23,92
19°C	BH	SENSIBLE	18,10	17,81	17,51	17,22	16,92	21,61	21,23	20,83	20,40	19,94
29°C	BS	TOTAL	24,15	23,41	22,66	21,90	21,12	29,82	28,86	27,84	26,74	25,55
21°C	BH	SENSIBLE	18,06	17,77	17,48	17,18	16,88	21,52	21,14	20,74	20,31	19,85
32°C	BS	TOTAL	25,90	25,11	24,32	23,51	22,68	31,85	30,82	29,72	28,54	27,26
23°C	BH	SENSIBLE	19,16	18,88	18,59	18,30	18,00	22,75	22,37	21,96	21,53	21,06

BS - Dry bulb
BH - Wet bulb

COLING CAPACITIES

R-22

FLHA 30

TEMPERATURA ENTRADA AIRE UNIDAD INTERIOR		CAPACIDAD FRIGORIFICA EN kW	TEMPERATURA ENTRADA AIRE A LA UNIDADEXTERIOR ºC BULBO SECO				
			25°C	30°C	35°C	40°C	45°C
21°C	BS	TOTAL	25,76	24,93	24,39	23,08	22,02
15°C	BH	SENSIBLE	19,70	19,30	18,87	18,41	17,90
24°C	BS	TOTAL	27,55	26,66	25,70	24,66	23,52
17°C	BH	SENSIBLE	21,05	20,64	20,21	19,74	19,23
27°C	BS	TOTAL	29,44	28,48	27,60	26,33	25,10
19°C	BH	SENSIBLE	22,35	21,94	21,50	21,02	20,51
29°C	BS	TOTAL	31,45	30,42	29,30	28,10	26,77
21°C	BH	SENSIBLE	22,26	21,84	21,40	20,92	20,40
32°C	BS	TOTAL	33,57	32,45	31,25	29,94	---
23°C	BH	SENSIBLE	23,48	23,06	22,61	22,13	---

BS - Dry bulb
BH - Wet bulb

CALCULATION OF COOLING CAPACITY DEPENDING ON AIR FLOW

CORRECTION COEFFICIENT TO FIX TO THE CAPACITY OF DIFFERENT INDOOR FANS AIR FLOW

MODELS 10-12-16-22			
Air flow	min	nominal	max
Cooling capacity	x0,97	x1,00	x1,01
Sensible capacity	x0,90	x1,00	x1,03

MODELS 24-28-30			
Air flow	min	nominal	max
Cooling capacity	x0,98	x1,00	x1,01
Sensible capacity	x0,95	x1,00	x1,02

CORRECTION COEFFICIENT TO FIX TO THE CAPACITY OF DIFFERENT OUTDOOR FANS AIR FLOW

MODELS 10-12-16-22			
Air flow	min	nominal	max
Cooling capacity	x0,97	x1,00	x1,01
Capacidad sensible	x0,97	x1,00	x1,01

MODELS 24-28-30			
Air flow	min	nominal	max
Cooling Capcity	x0,98	x1,00	x1,01
Capacidad sensible	x0,98	x1,00	x1,01

COOLING CAPACITY

R-407C

FLHK 10 / FLHK 12

TEMPERATURA ENTRADA AIRE UNIDAD INTERIOR	Kw	TEMPERATURA ENTRADA AIRE A LA UNIDAD EXTERIOR ºC BULBO HÚMEDO						TEMPERATURA ENTRADA AIRE A LA UNIDAD EXTERIOR ºC BULBO HÚMEDO					
		-8°C	-4°C	0°C	6°C	12°C	18°C	-8°C	-4°C	0°C	6°C	12°C	18°C
15°C BS	Total capcity	6,83	7,61	8,49	10,06	11,95	14,10	8,37	9,31	10,35	12,13	14,25	16,66
	T.consumption	2,63	2,70	2,79	2,94	3,14	3,38	3,33	3,44	3,57	3,79	4,06	4,38
18°C BS	Total capacity	6,82	7,59	8,47	10,02	11,88	13,99	8,37	9,30	10,32	12,08	14,16	16,52
	T.consumption	2,77	2,84	2,93	3,09	3,30	3,55	3,49	3,61	3,74	3,97	4,26	4,61
20°C BS	Total capacityl	6,82	7,58	8,46	10,00	11,83	13,92	8,37	9,29	10,30	12,00	14,10	16,42
	T.consumptionl	2,86	2,94	3,03	3,16	3,41	3,67	3,60	3,73	3,86	4,11	4,40	4,77
24°C BS	Total capacity	6,82	7,587	8,44	9,94	11,75	13,76	8,37	9,27	10,27	11,97	13,98	16,21
	T. consumption	3,06	3,15	3,25	3,43	3,66	3,93	3,84	3,97	4,12	4,38	4,71	5,12

FLHK 16 / FLHK 22

TEMPERATURA ENTRADA AIRE UNIDAD INTERIOR	Kw	TEMPERATURA ENTRADA AIRE A LA UNIDAD EXTERIOR ºC BULBO HÚMEDO						TEMPERATURA ENTRADA AIRE A LA UNIDAD EXTERIOR ºC BULBO HÚMEDO					
		-8°C	-4°C	0°C	6°C	12°C	18°C	-8°C	-4°C	0°C	6°C	12°C	18°C
15°C BS	Capacidad Total	10,64	11,87	13,26	15,67	18,57	21,86	13,80	15,43	17,24	20,42	24,35	28,97
	Consumo Total	4,66	4,80	4,97	5,27	5,65	6,11	5,86	5,98	6,13	6,39	6,75	7,20
18°C BS	Capacidad Total	10,60	11,82	13,20	15,58	18,44	21,67	13,76	15,37	17,17	20,32	24,20	28,75
	Consumo Total	4,84	4,99	5,17	5,48	5,88	6,36	6,07	6,21	6,36	6,64	7,00	7,48
20°C BS	Capacidad Total	10,58	11,80	13,16	15,50	18,36	21,55	13,73	15,34	17,14	20,20	24,10	28,60
	Consumo Total	4,97	5,13	5,31	5,60	6,04	6,53	6,23	6,37	6,53	6,74	7,19	7,68
24°C BS	Capacidad Total	10,56	11,76	13,11	15,42	18,18	21,29	13,70	15,30	17,07	20,15	23,91	28,29
	Consumo Total	5,24	5,41	5,61	5,95	6,39	6,90	6,57	6,72	6,89	7,19	7,60	8,10

FLHK 24 / FLHK 28

TEMPERATURA ENTRADA AIRE UNIDAD INTERIOR	Kw	TEMPERATURA ENTRADA AIRE A LA UNIDAD EXTERIOR ºC BULBO HÚMEDO						TEMPERATURA ENTRADA AIRE A LA UNIDAD EXTERIOR ºC BULBO HÚMEDO					
		-8°C	-4°C	0°C	6°C	12°C	18°C	-8°C	-4°C	0°C	6°C	12°C	18°C
15°C BS	Capacidad Total	15,76	17,47	19,36	22,61	26,53	31,04	19,02	21,06	23,34	27,29	32,11	37,68
	Consumo Total	7,17	7,39	7,63	8,04	8,55	9,17	7,71	7,91	8,14	8,56	9,09	9,75
18°C BS	Capacidad Total	15,75	17,44	19,31	22,52	26,37	30,80	19,01	21,03	23,27	27,18	31,92	37,41
	Consumo Total	7,46	7,69	7,94	8,37	8,91	9,55	8,03	8,24	8,49	8,92	9,49	10,18
20°C BS	Capacidad Total	15,75	17,43	19,28	22,50	26,27	30,65	19,01	21,01	23,24	27,00	32,41	37,24
	Consumo Total	7,66	7,90	8,16	8,60	9,15	9,82	8,25	8,47	8,73	9,20	9,77	10,48
24°C BS	Capacidad Total	15,75	17,41	19,23	22,34	26,07	30,34	19,04	21,01	23,20	27,00	31,60	36,92
	Consumo Total	8,07	8,33	8,61	9,08	9,68	10,38	8,71	8,96	9,24	9,73	10,35	11,11

FLHK 30

TEMPERATURA ENTRADA AIRE UNIDAD INTERIOR	Kw	TEMPERATURA ENTRADA AIRE A LA UNIDAD EXTERIOR ºC BULBO HÚMEDO					
		-8°C	-4°C	0°C	6°C	12°C	18°C
15°C BS	Capacidad Total	20,04	22,17	24,55	28,71	33,80	39,74
	Consumo Total	8,45	8,69	8,96	9,44	10,06	10,82
18°C BS	Capacidad Total	20,06	22,17	24,53	28,63	33,67	39,51
	Consumo Total	8,82	9,08	9,36	9,87	10,52	11,32
20°C BS	Capacidad Total	20,09	22,18	24,52	28,70	33,58	39,37
	Consumo Total	9,08	9,34	9,64	10,32	10,84	11,68
24°C BS	Capacidad Total	20,67	22,24	24,54	28,55	33,43	39,11
	Consumo Total	9,62	9,91	10,23	10,80	11,53	12,42

COOLING CAPACITY

R-22

FLHA 10 / FLHA 12

TEMPERATURA ENTRADA AIRE UNIDAD INTERIOR	Kw	TEMPERATURA ENTRADA AIRE A LA UNIDAD EXTERIOR ºC BULBO HÚMEDO						TEMPERATURA ENTRADA AIRE A LA UNIDAD EXTERIOR ºC BULBO HÚMEDO					
		-8°C	-4°C	0°C	6°C	12°C	18°C	-8°C	-4°C	0°C	6°C	12°C	18°C
15°C BS	Capacidad Total	7,13	7,94	8,84	10,38	12,22	14,30	8,51	9,48	10,53	12,33	14,47	16,90
	Consumo Total	2,51	2,56	2,63	2,73	2,86	3,02	2,87	2,96	3,05	3,19	3,36	3,57
18°C BS	Capacidad Total	7,12	7,92	8,81	10,33	12,15	14,19	8,52	9,47	10,52	12,30	14,41	16,79
	Consumo Total	2,62	2,68	2,74	2,85	2,99	3,16	3,00	3,09	3,18	3,34	3,52	3,74
20°C BS	Capacidad Total	7,12	7,91	8,79	10,30	12,09	14,12	8,52	9,47	10,51	12,30	14,36	16,72
	Consumo Total	2,70	2,76	2,82	2,93	3,08	3,26	3,10	3,18	3,28	3,44	3,63	3,86
24°C BS	Capacidad Total	7,11	7,89	8,76	10,25	12,01	13,98	8,54	9,47	10,49	12,23	14,27	16,57
	Consumo Total	2,87	2,93	3,00	3,12	3,27	3,46	3,29	3,38	3,48	3,66	3,87	4,12

FLHA 16 / FLHA 22

TEMPERATURA ENTRADA AIRE UNIDAD INTERIOR	Kw	TEMPERATURA ENTRADA AIRE A LA UNIDAD EXTERIOR ºC BULBO HÚMEDO						TEMPERATURA ENTRADA AIRE A LA UNIDAD EXTERIOR ºC BULBO HÚMEDO					
		-8°C	-4°C	0°C	6°C	12°C	18°C	-8°C	-4°C	0°C	6°C	12°C	18°C
15°C BS	Capacidad Total	10,95	12,14	13,46	15,74	18,45	21,51	13,70	15,30	17,08	20,13	23,73	27,80
	Consumo Total	4,25	4,34	4,44	4,62	4,85	5,15	5,64	5,76	5,90	6,15	6,47	6,85
18°C BS	Capacidad Total	10,93	12,11	13,42	15,67	18,33	21,35	13,66	15,24	17,00	20,02	23,60	27,64
	Consumo Total	4,42	4,51	4,62	4,81	5,05	5,36	5,82	5,95	6,09	6,35	6,68	7,08
20°C BS	Capacidad Total	10,93	12,09	13,39	15,60	18,26	21,24	13,64	15,20	16,95	20,00	23,52	27,53
	Consumo Total	4,55	4,64	4,74	4,94	5,19	5,51	5,94	6,08	6,23	6,60	6,84	7,25
24°C BS	Capacidad Total	10,92	12,07	13,35	15,53	18,11	21,02	13,60	15,14	16,86	19,82	23,34	27,29
	Consumo Total	4,81	4,90	5,01	5,22	5,49	5,83	6,21	6,35	6,51	6,80	7,16	7,59

FLHA 24 / FLHA 28

TEMPERATURA ENTRADA AIRE UNIDAD INTERIOR	Kw	TEMPERATURA ENTRADA AIRE A LA UNIDAD EXTERIOR ºC BULBO HÚMEDO						TEMPERATURA ENTRADA AIRE A LA UNIDAD EXTERIOR ºC BULBO HÚMEDO					
		-8°C	-4°C	0°C	6°C	12°C	18°C	-8°C	-4°C	0°C	6°C	12°C	18°C
15°C BS	Capacidad Total	15,82	17,61	19,54	22,80	26,69	31,18	18,61	20,68	22,98	26,93	31,67	37,08
	Consumo Total	6,69	6,86	7,04	7,32	7,67	8,10	7,23	7,40	7,58	7,90	8,30	8,78
18°C BS	Capacidad Total	15,81	17,58	19,48	22,70	26,53	30,97	18,60	20,66	22,93	26,84	31,51	36,82
	Consumo Total	3,93	7,10	7,28	7,58	7,95	8,40	7,51	7,69	7,88	8,22	8,64	9,14
20°C BS	Capacidad Total	15,81	17,56	19,45	22,80	26,44	30,83	18,60	20,65	22,91	27,00	31,40	36,65
	Consumo Total	7,09	7,27	7,46	7,80	8,14	8,61	7,71	7,89	8,09	8,43	8,87	9,38
24°C BS	Capacidad Total	15,82	17,55	19,41	22,53	26,26	30,58	18,59	20,63	22,86	26,68	31,19	36,31
	Consumo Total	7,44	7,64	7,83	8,16	8,56	9,06	8,11	8,31	8,53	8,90	9,36	9,91

FLHA 30

TEMPERATURA ENTRADA AIRE UNIDAD INTERIOR	Kw	TEMPERATURA ENTRADA AIRE A LA UNIDAD EXTERIOR ºC BULBO HÚMEDO					
		-8°C	-4°C	0°C	6°C	12°C	18°C
15°C BS	Capacidad Total	20,51	22,78	25,30	29,64	34,85	40,79
	Consumo Total	7,89	8,10	8,34	8,75	9,26	9,87
18°C BS	Capacidad Total	20,51	22,78	25,28	29,58	34,71	40,54
	Consumo Total	8,21	8,44	8,69	9,12	9,65	10,29
20°C BS	Capacidad Total	20,52	22,77	25,27	29,80	34,62	40,38
	Consumo Total	8,44	8,67	8,93	9,43	9,92	10,59
24°C BS	Capacidad Total	20,54	22,78	25,25	29,46	34,43	40,05
	Consumo Total	8,90	9,16	9,44	9,92	10,51	11,21

COOLING CAPACITY

CALCULATION OF HEATING POWER DEPENDING ON AIR FLOW

CORRECTION COEFFICIENT TO FIX TO THE CAPACITY OF DIFFERENT INDOOR AIR FLOW FAN

MODELS 10-12-16-22			
Air flow	min.	nominal	max.
Heating capacity	x0,98	x1,00	x1,01
Total consumption	x0,98	x1,00	x1,01

MODELS 24-28-30			
Air flow	min	nominal	max
HeatingCapacity	x0,91	x1,00	x1,03
Total consumption	x0,98	x1,00	x1,01

CORRECTION COEFFICIENT TO FIX TO THE CAPACITY OF DIFFERENT OUTDOOR AIR FLOW FAN

MODELS 10-12-16-22			
Air flow	mínimo	nominal	máximo
Heating capacity	x0,98	x1,00	x1,01
Total consumption	x0,98	x1,00	x1,01

MODELS 24-28-30			
Air flow	min	nominal	max
Heating capacity	x0,91	x1,00	x1,03
Total consumption	x0,98	x1,00	x1,01

UNITS DIMENSIONS

MODELS 10-12 (COMPACT UNIT)

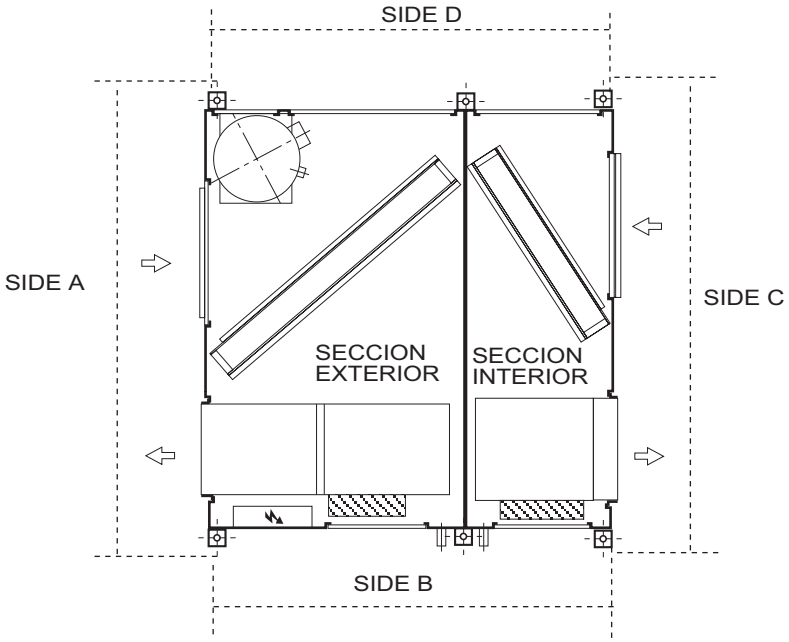

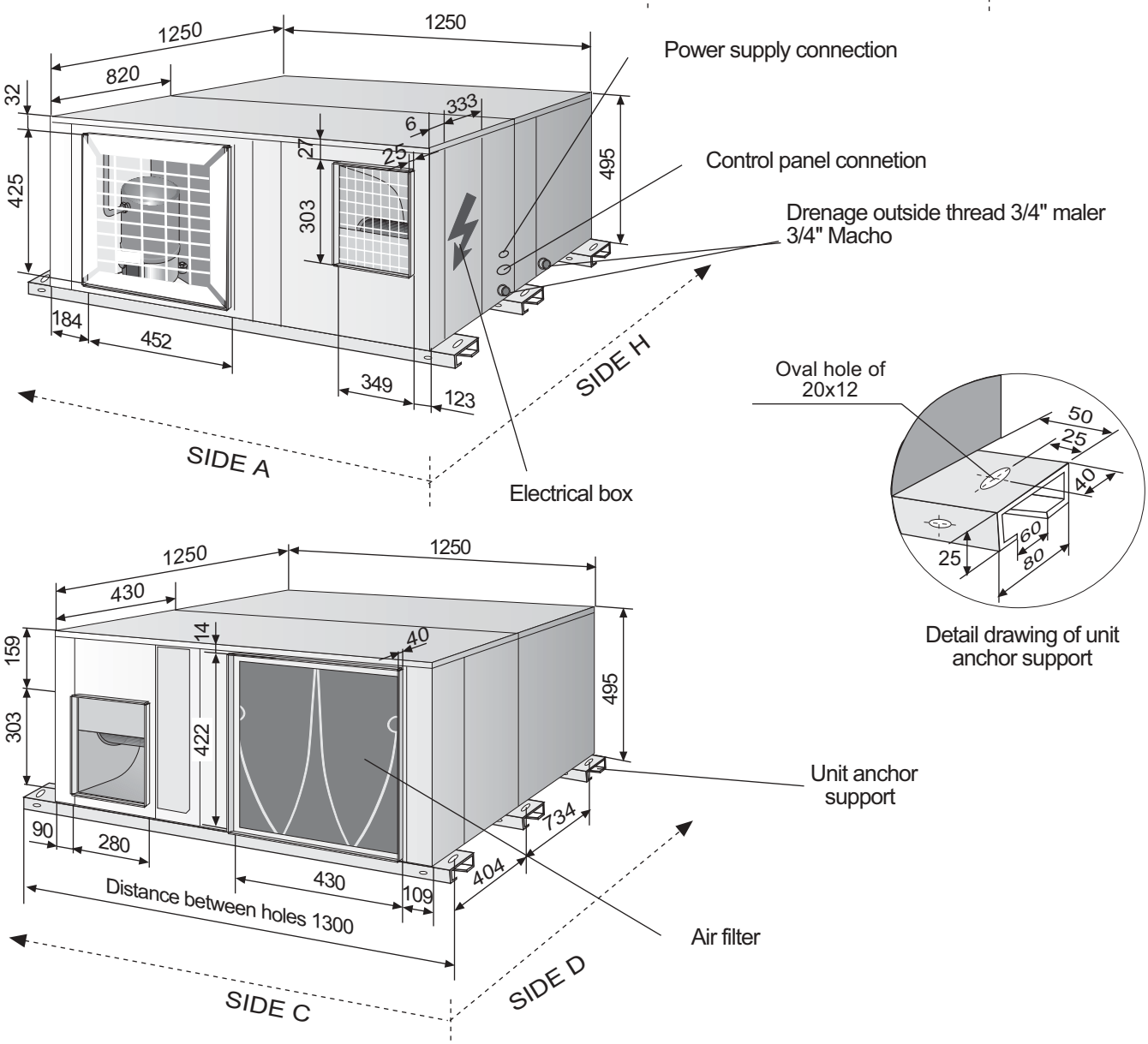

DIMENSIONS UNITS SPLIT SYSTEM

MODELS 10-12 (SPLIT UNIT)

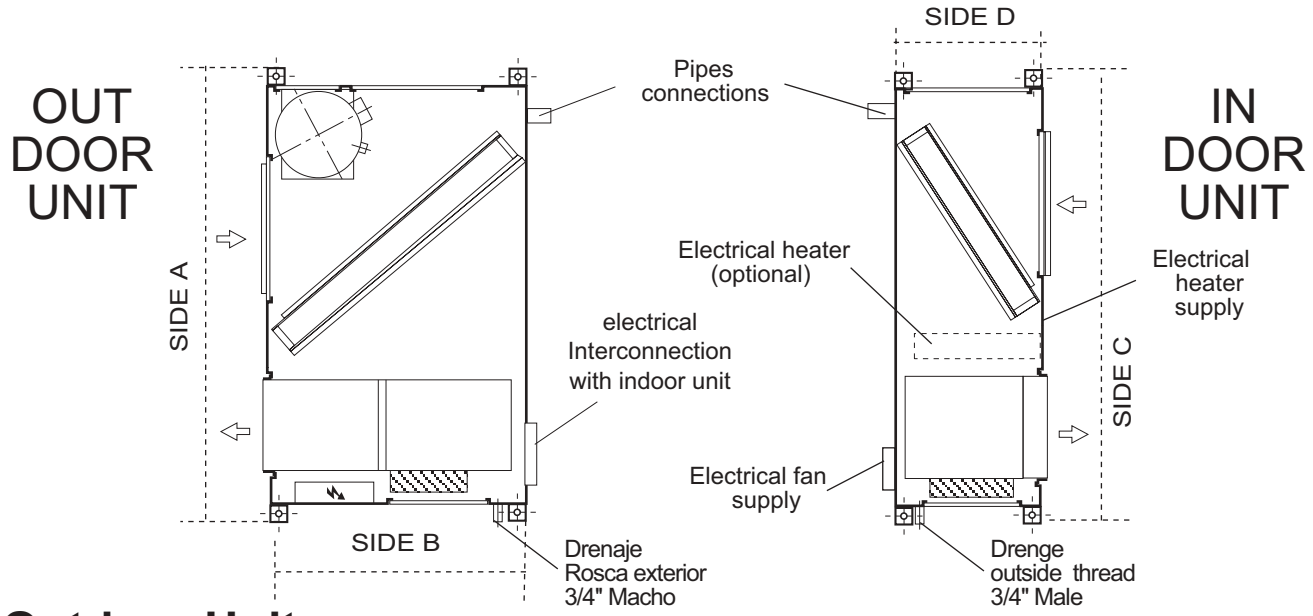

Outdoor Unit

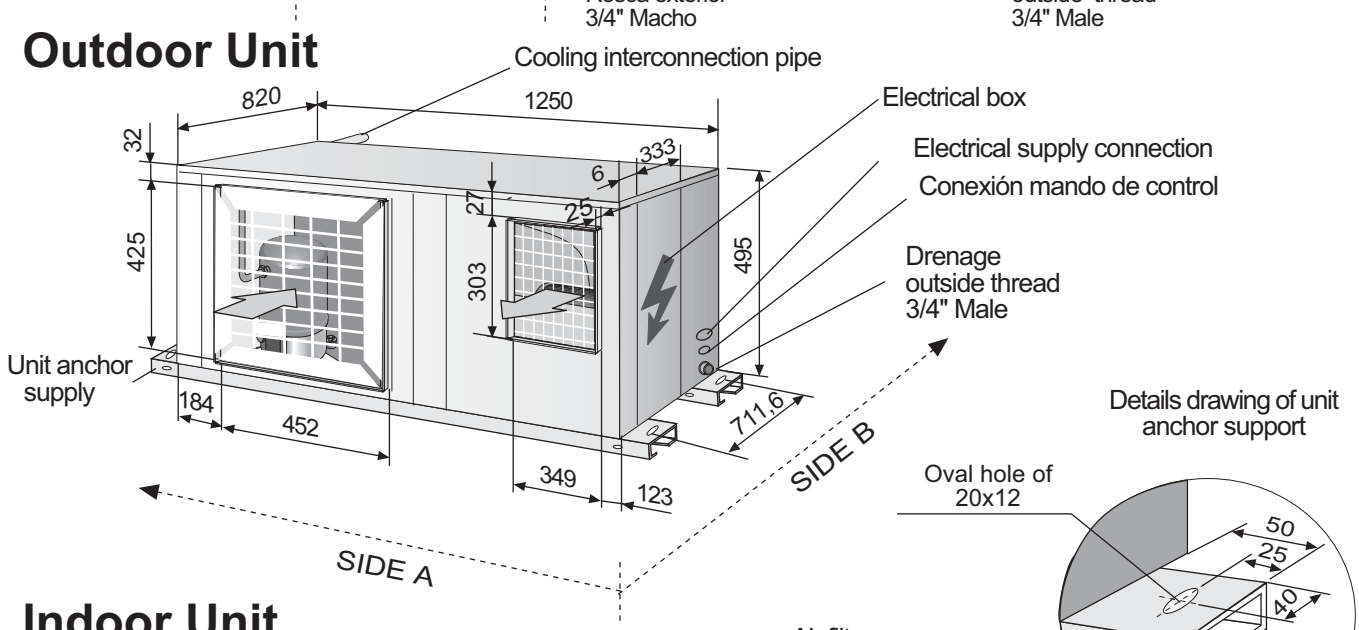

Indoor Unit

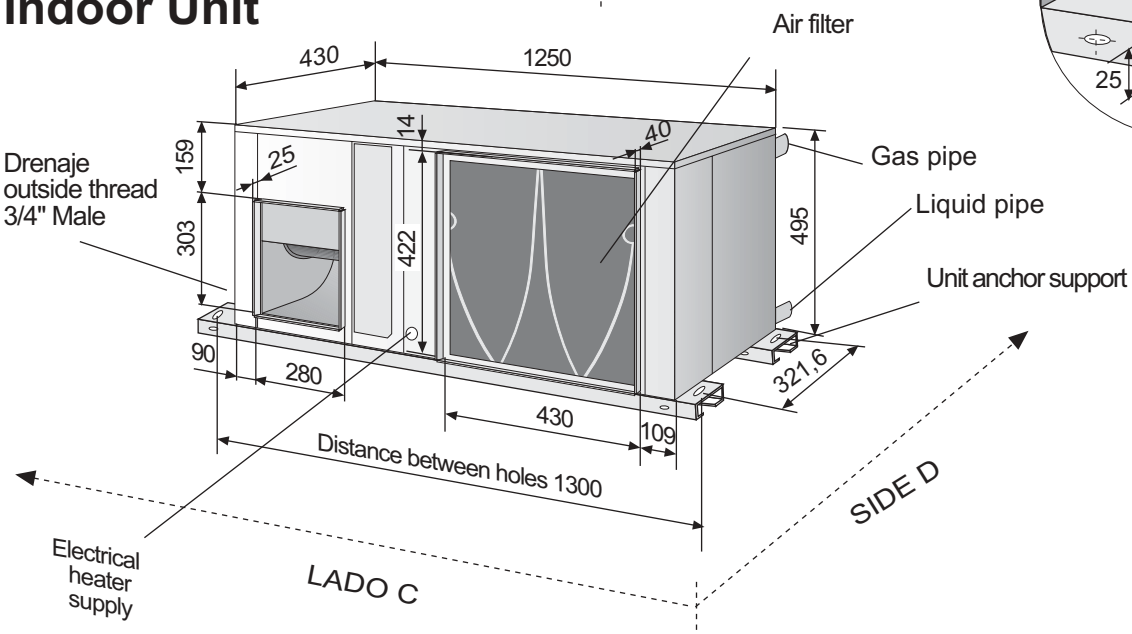

UNITS DIMENSIONS

MODEL 16
(Compact Unit)

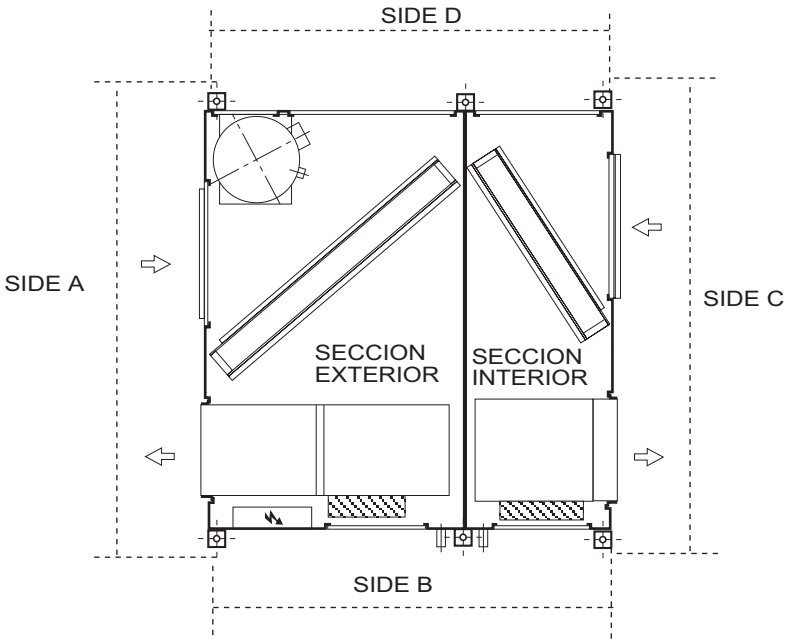

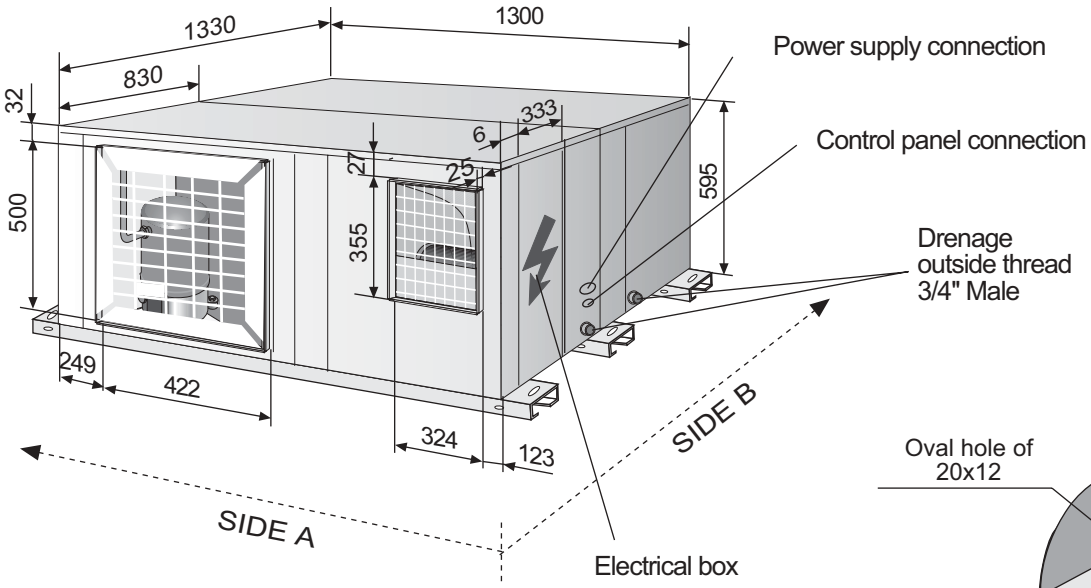

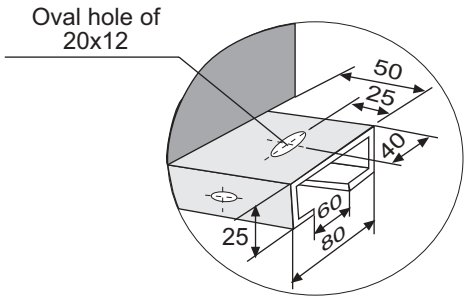

Details drawing of unit anchor support

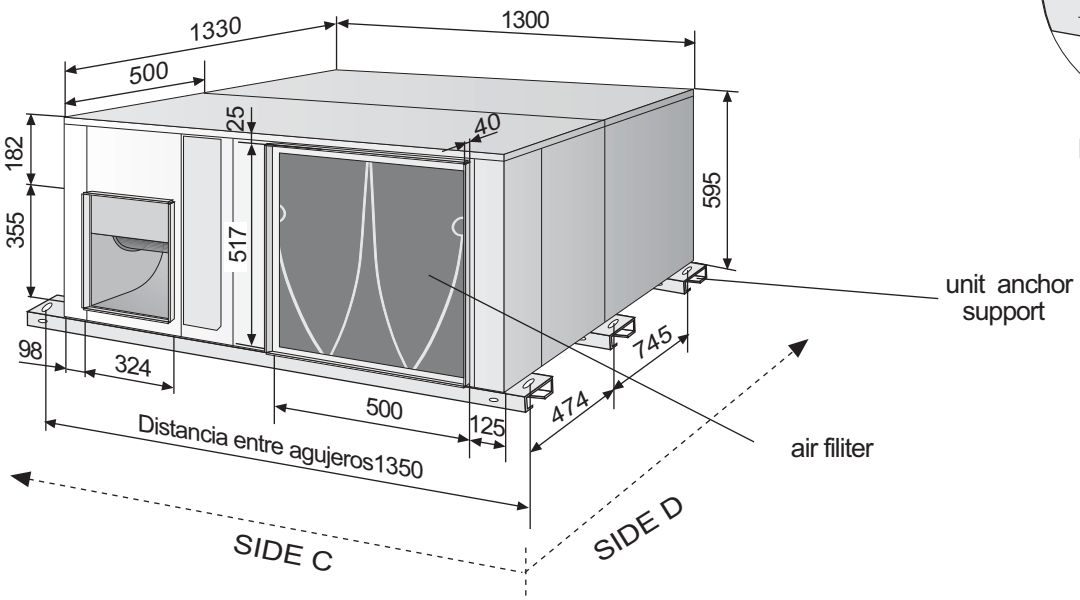

UNITS DIEMENSIONS

MODEL 16 (Unit Split)

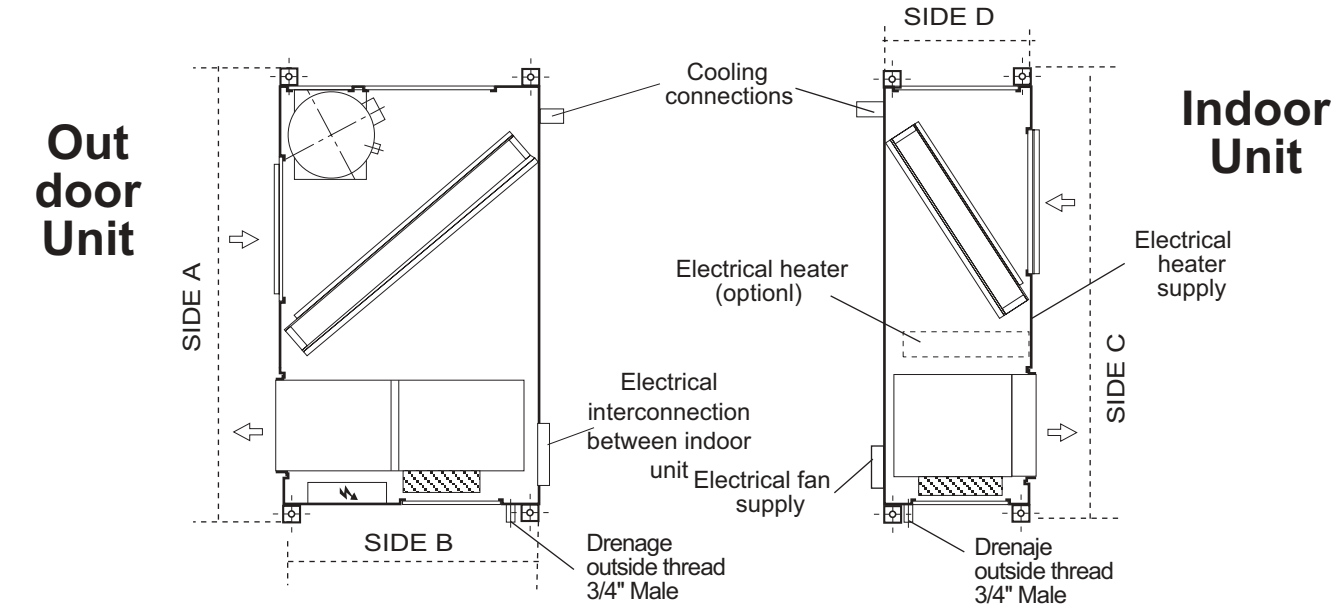

Outdoor unit

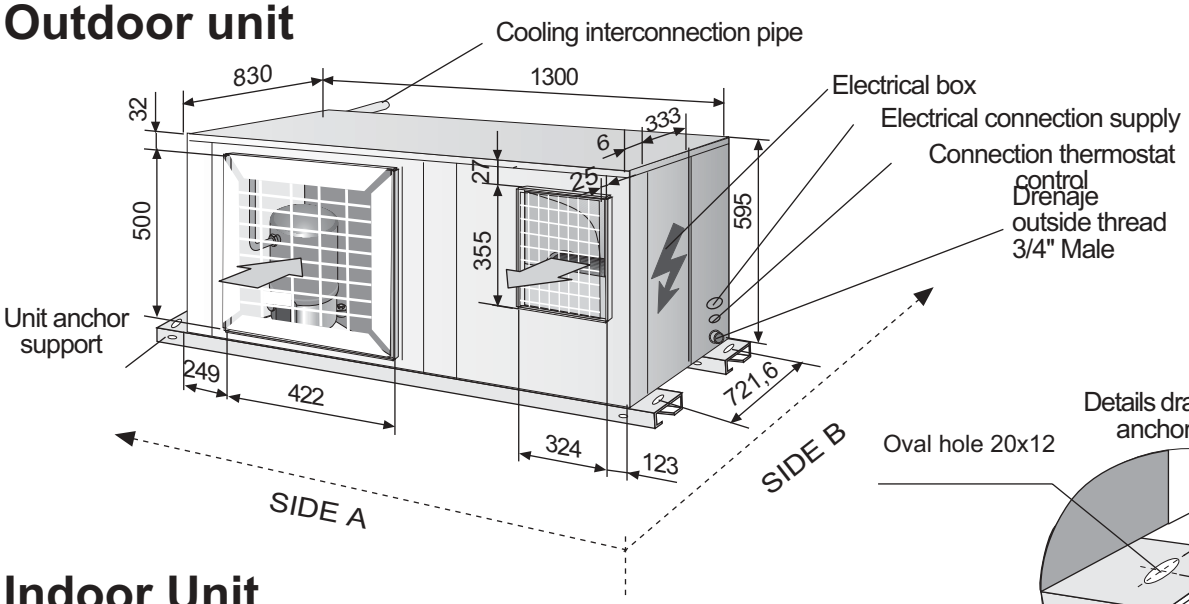

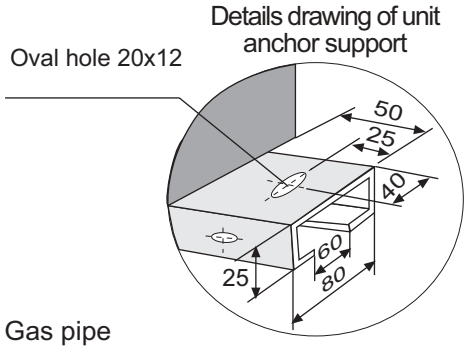

Indoor Unit

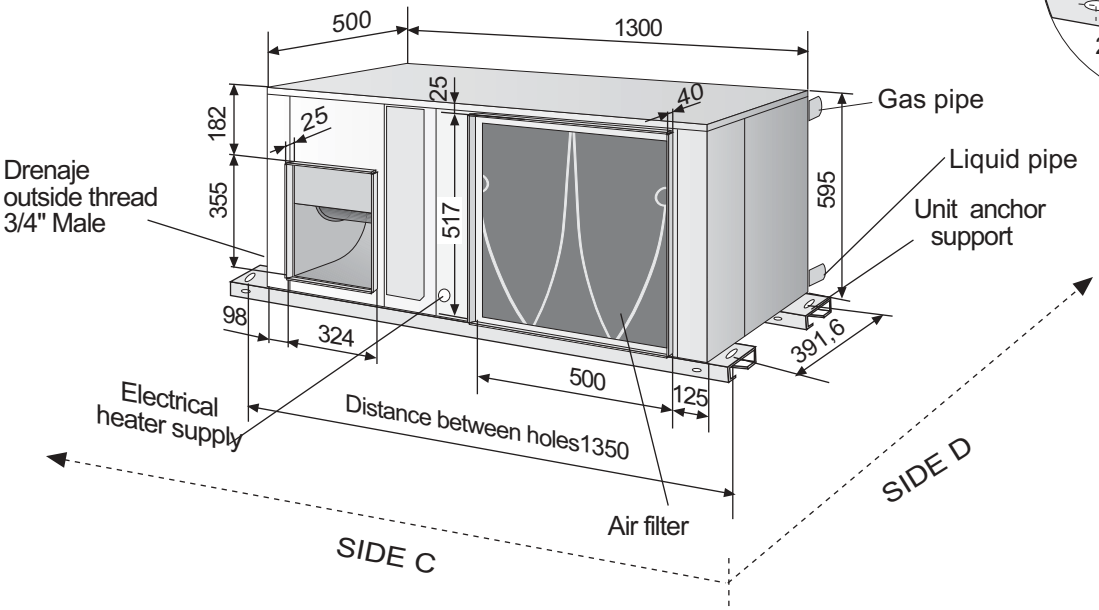

UNITS DIMENSIONS

MODEL 22
(Compact Unit)

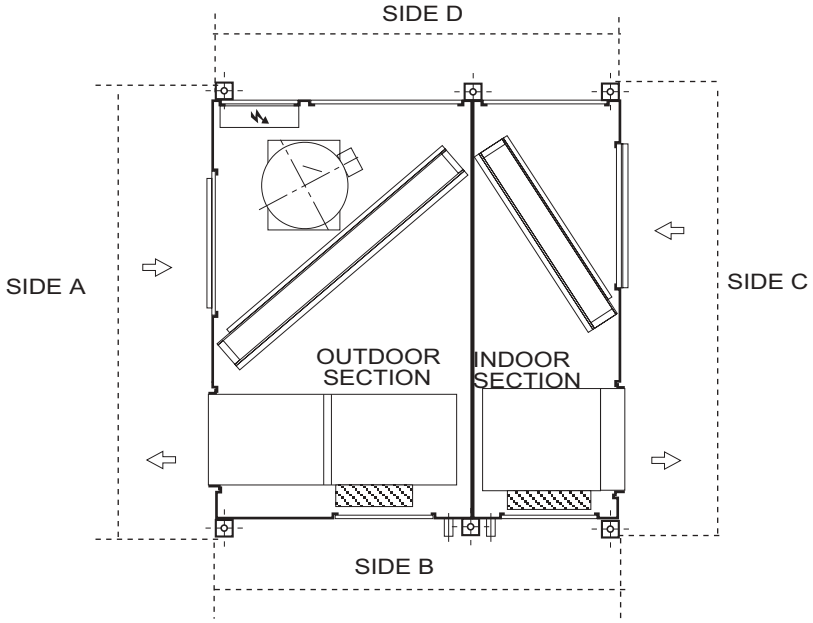

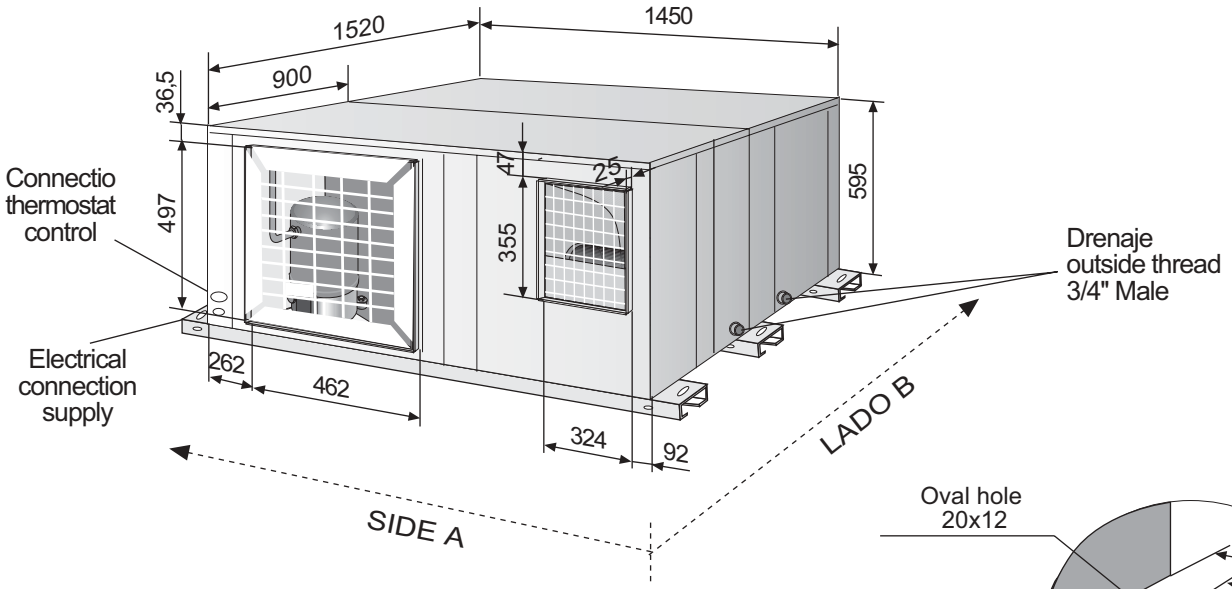

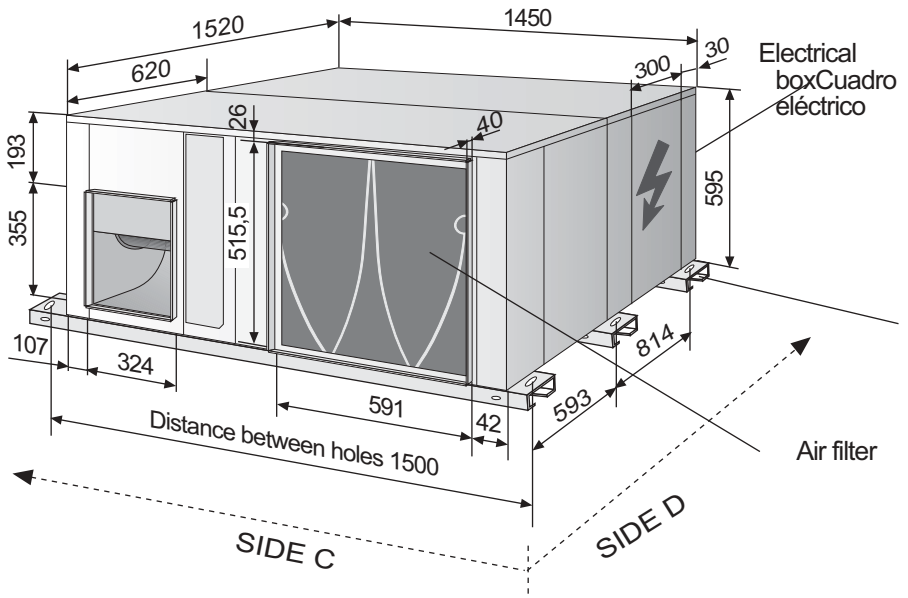

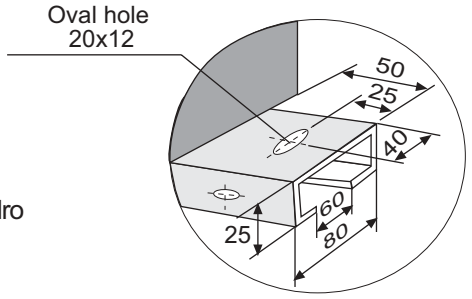

Details drawing of unit anchor support

UNITS DIMENSIONS

MODEL 22 (Split unit)

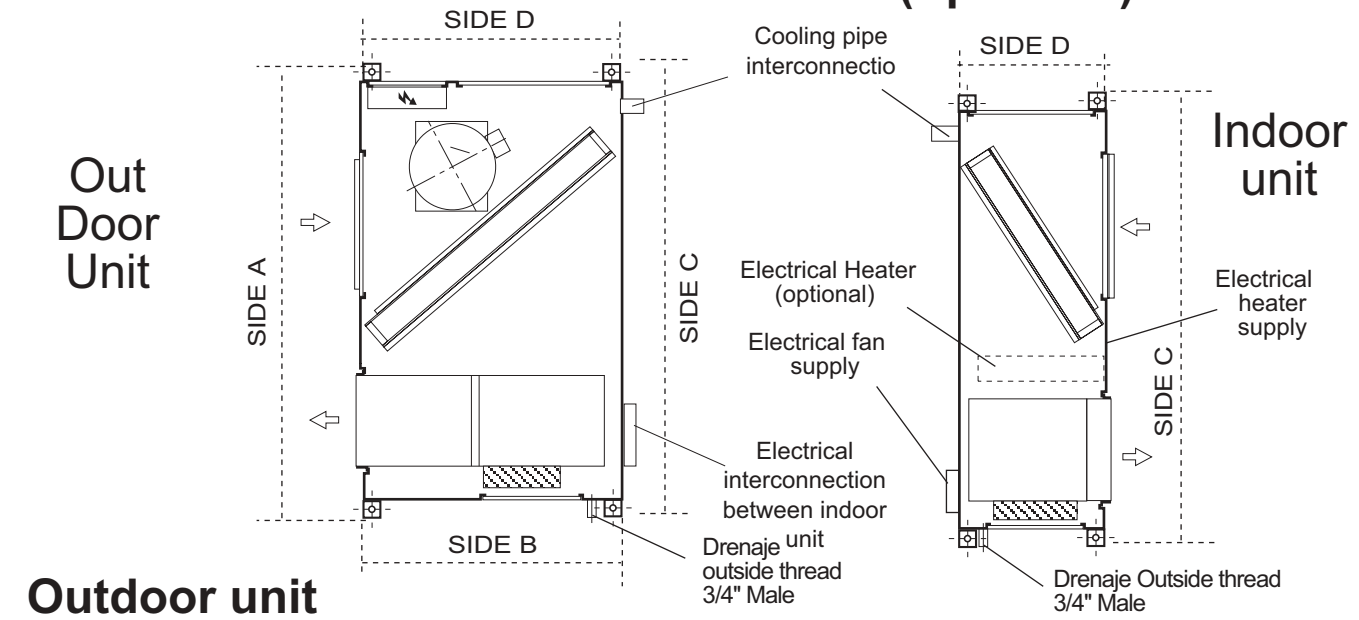

Outdoor unit

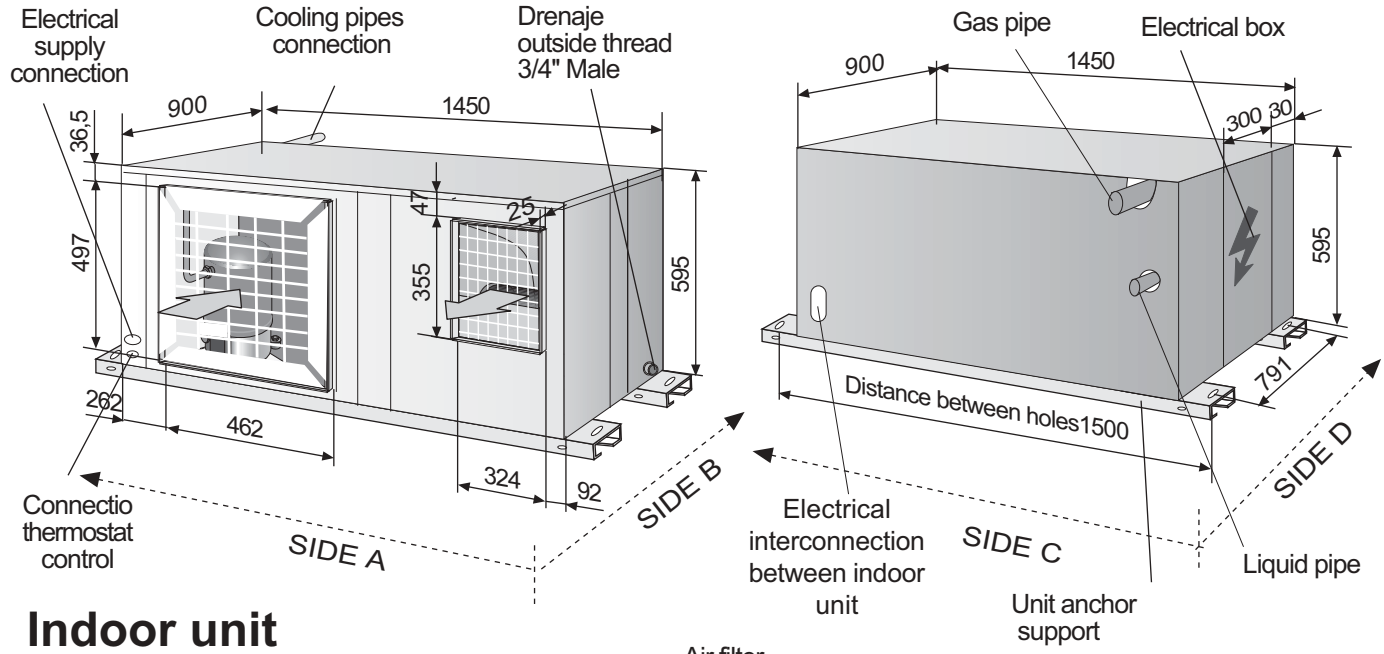

Indoor unit

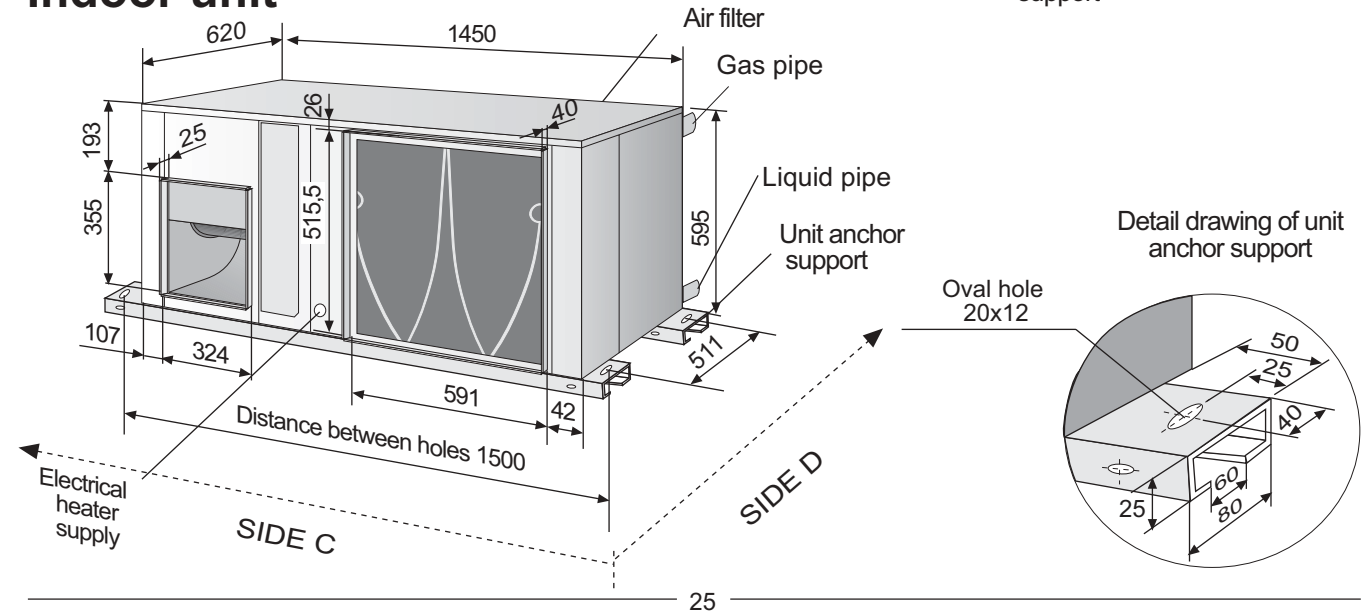

MODELS 24-28-30 (Compact Unit)

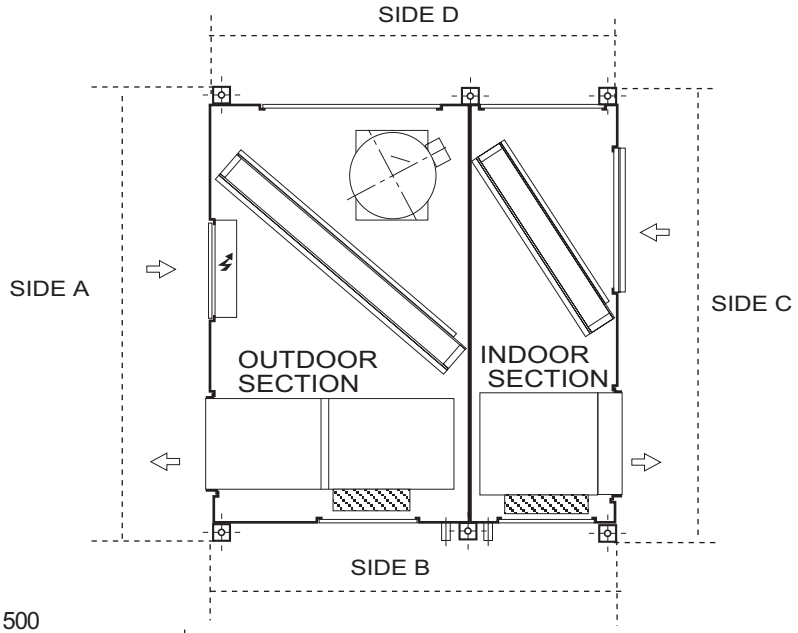

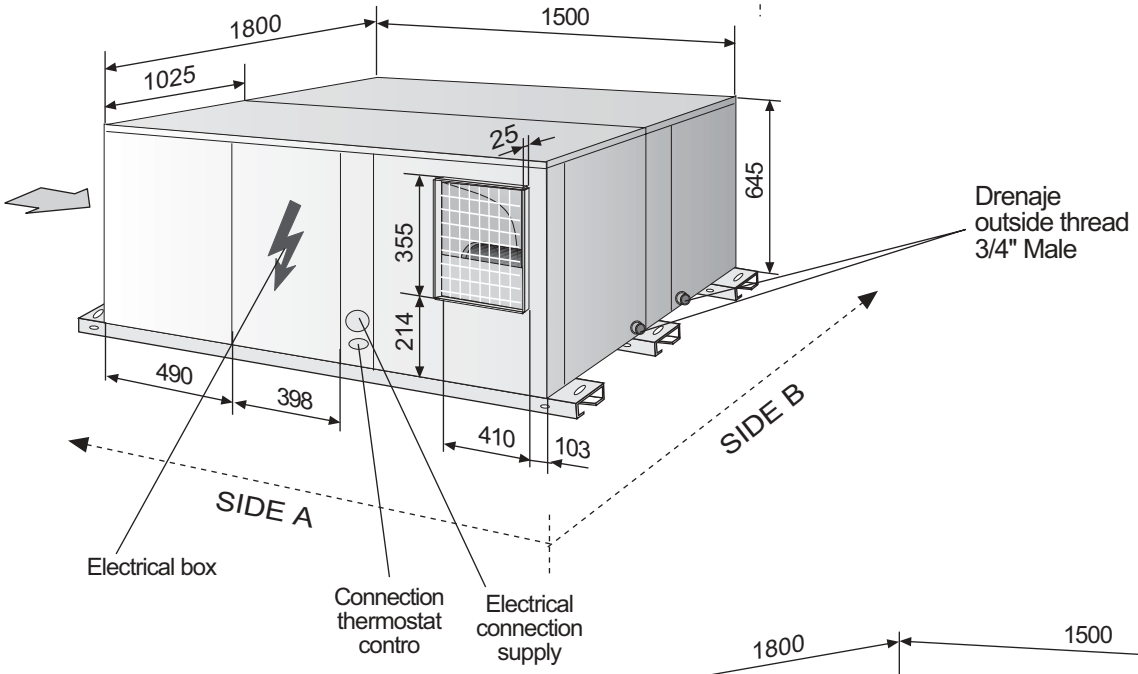

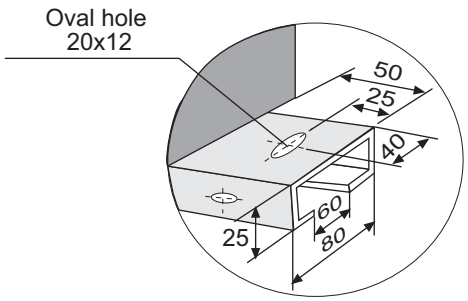

Detail drawing of unit anchor support

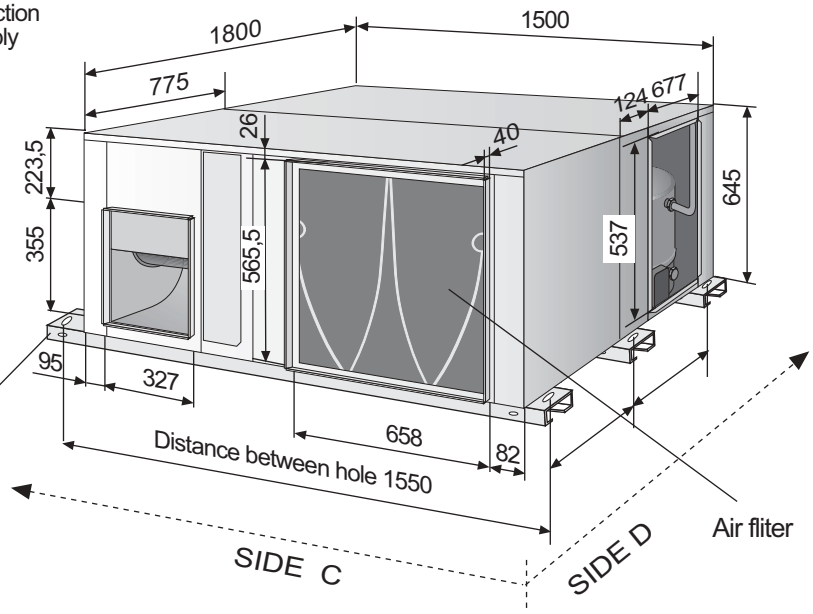

UNITS DIMENSIONS SPLIT SYSTEM

MODELS 24-28-30 (Split unit)

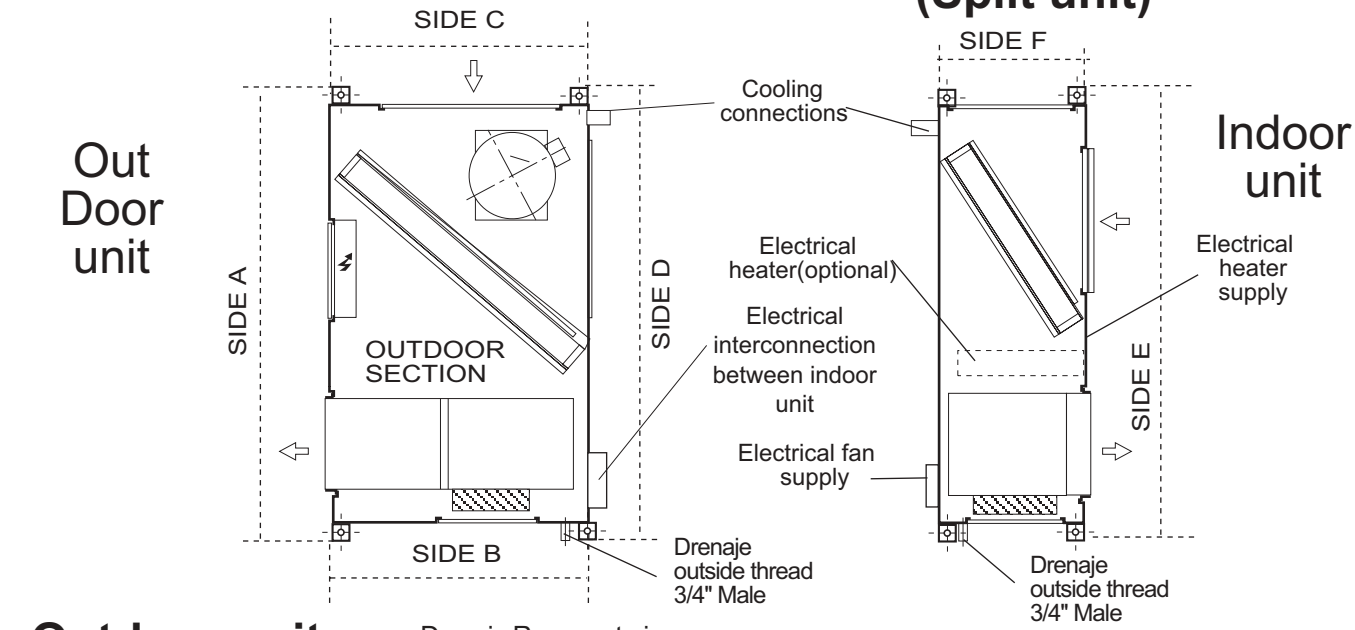

Outdoor unit

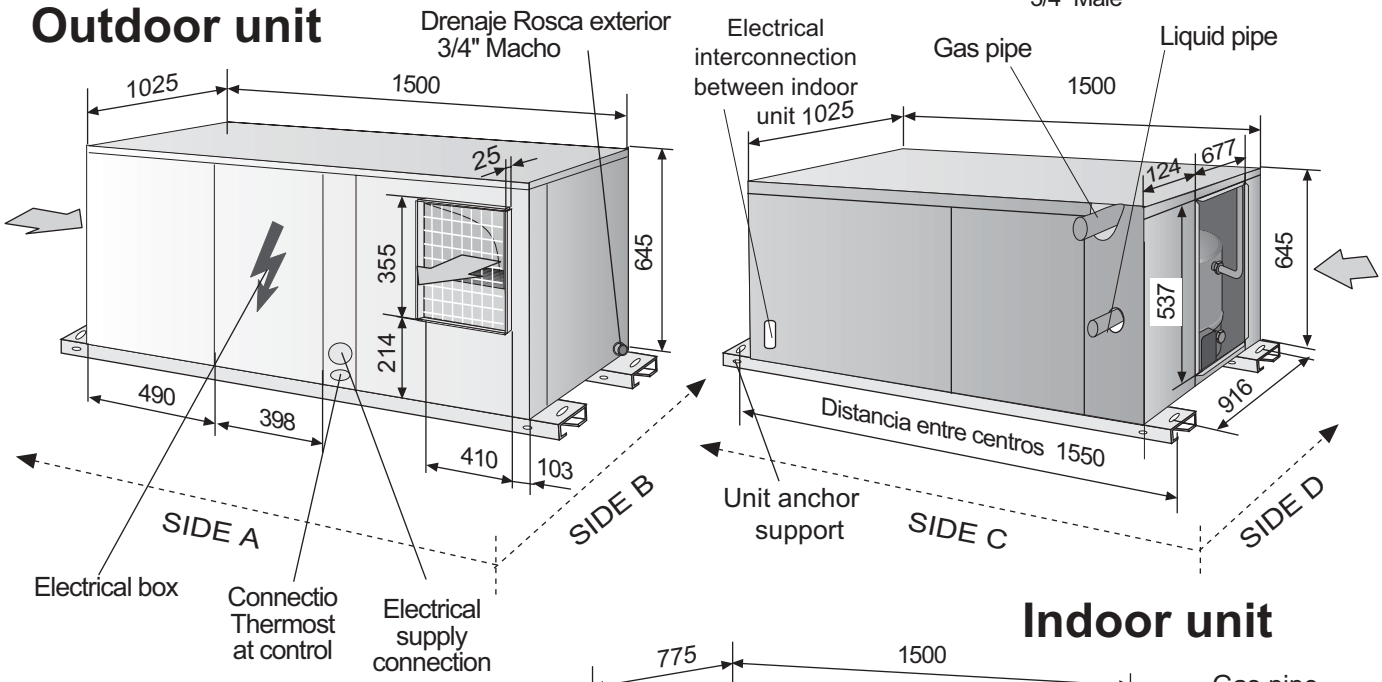

Indoor unit

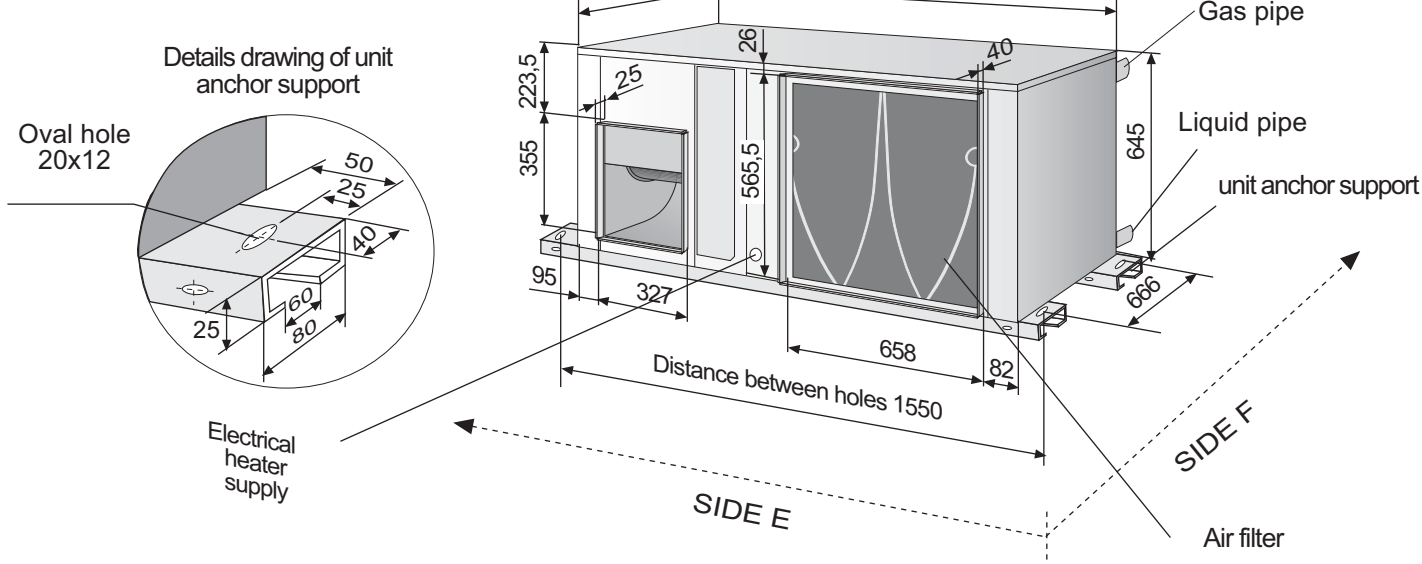

UNIT OPENING SIZES MODELS 10-12

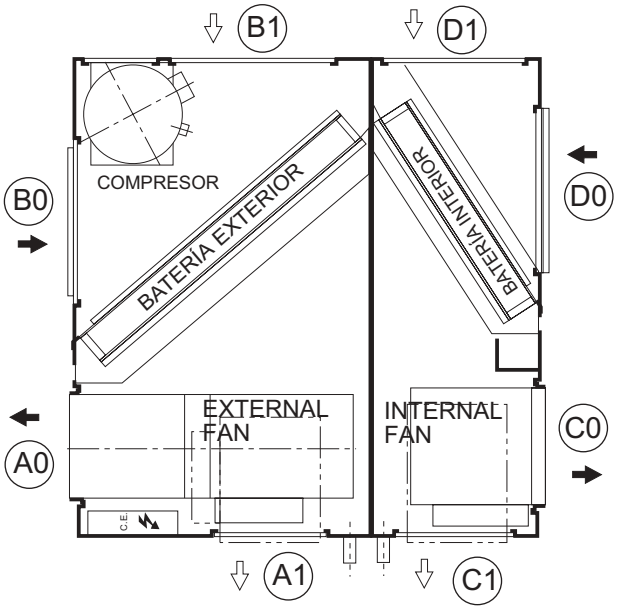

STANDARD EXECUTION

OPTIONAL EXECUTION

ELECTRICAL BOX

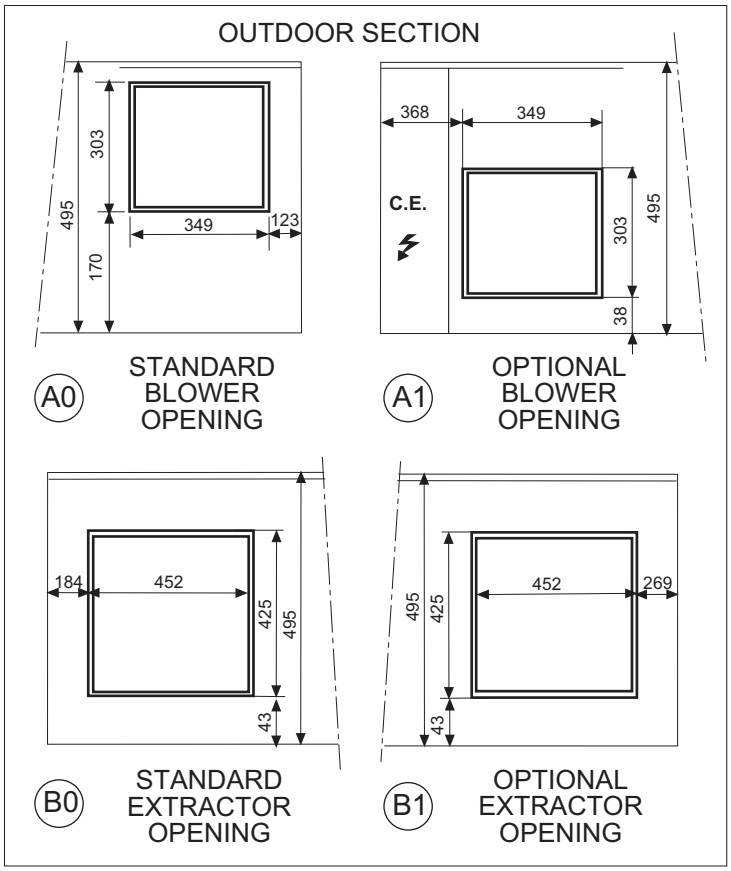

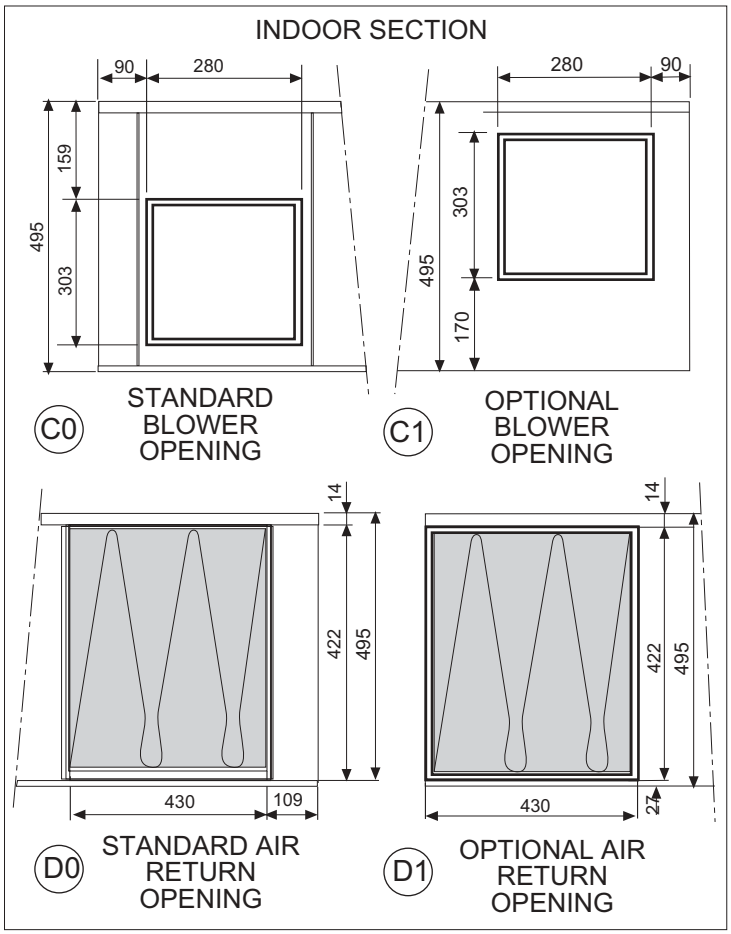

UNIT OPENING SIZES MODEL 22

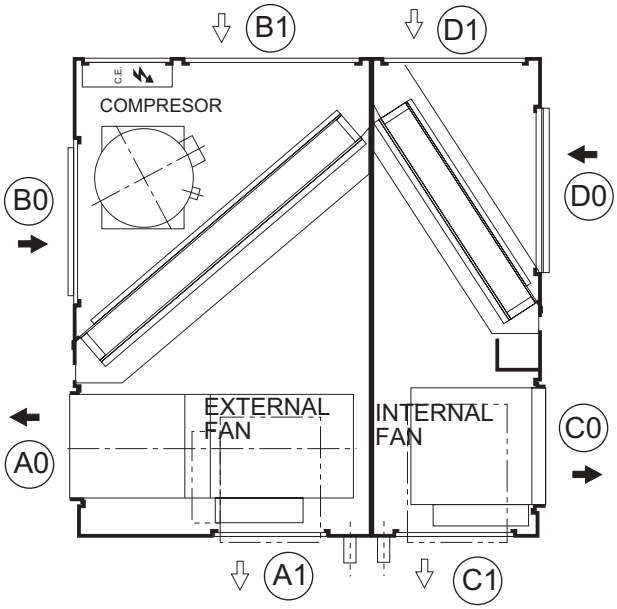

STANDARD EXECUTION

OPTIONAL EXECUTION

ELECTRICAL HEATER

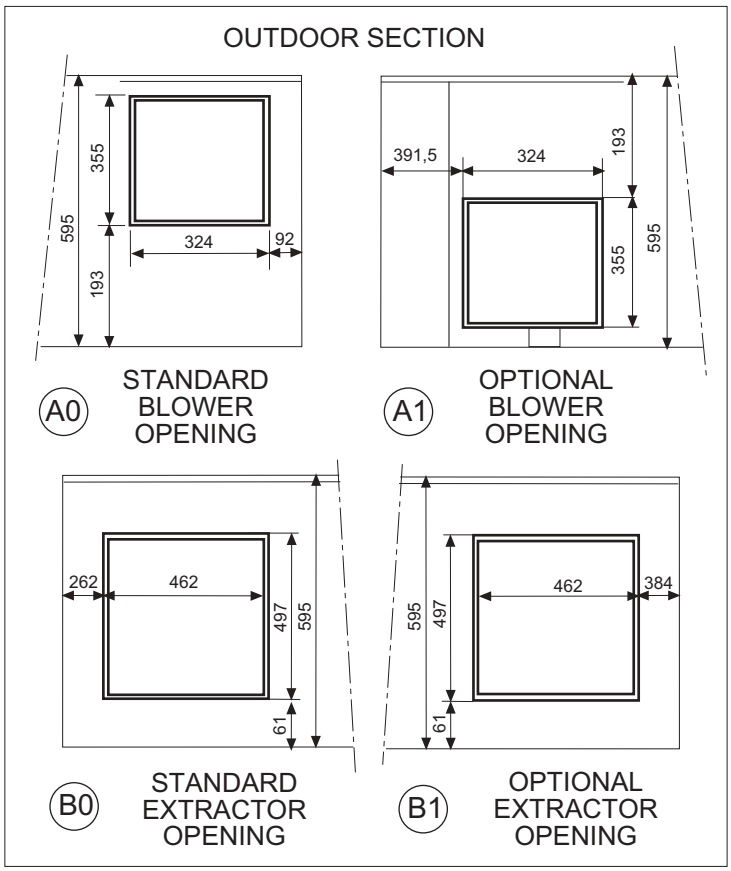

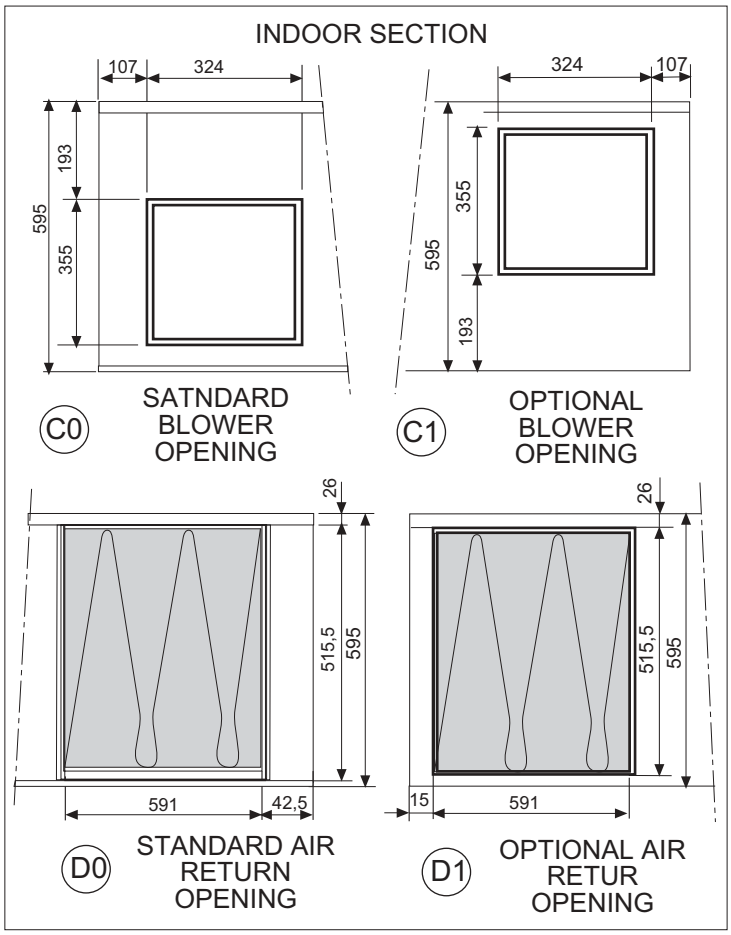

UNIT OPENING SIXES MODEL MODELO 22

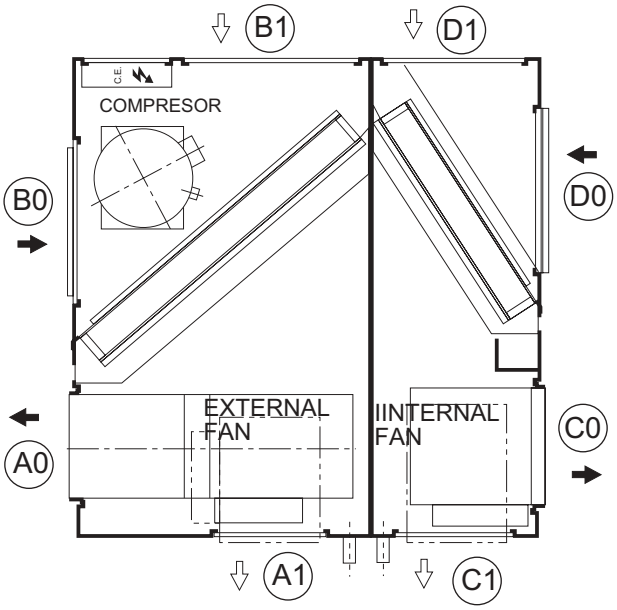

STANDARD EXECUTION

OPTIONAL EXECUTION

ELECTRICAL BOX

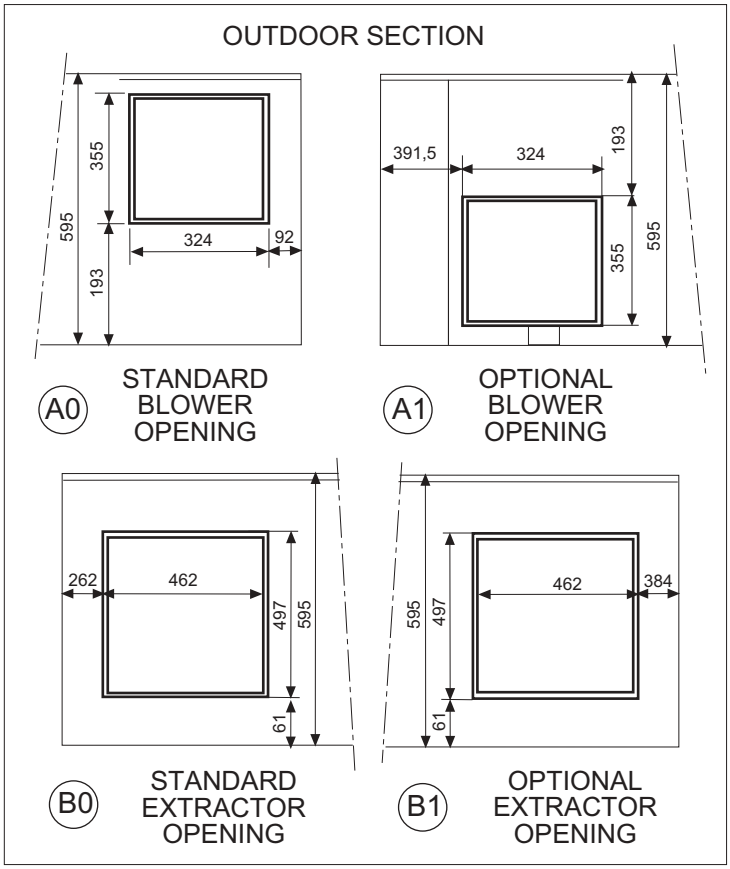

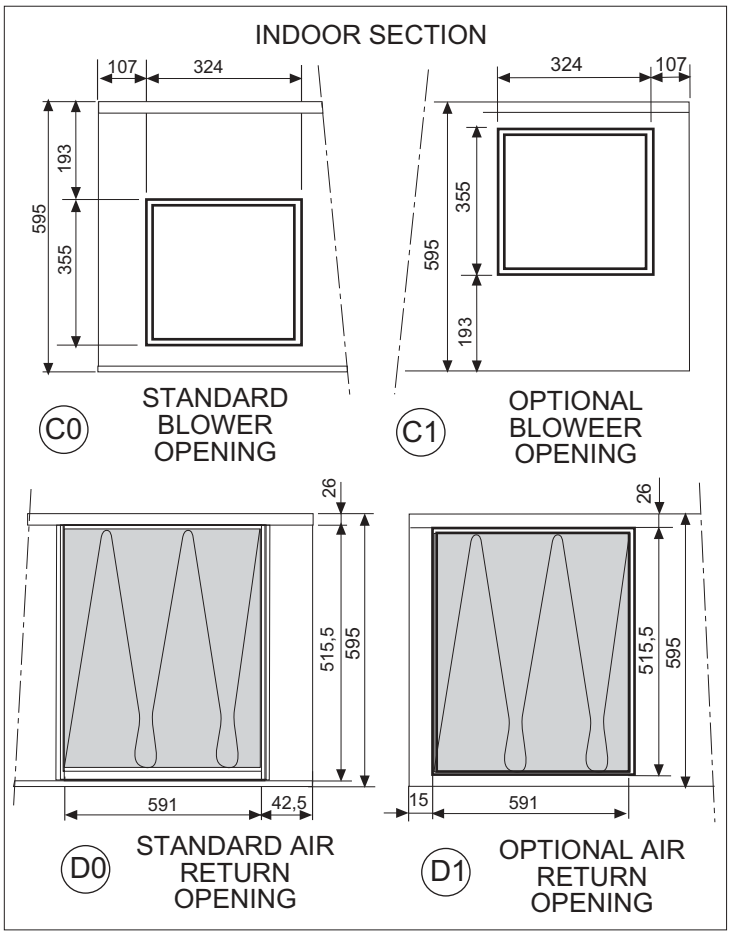

UNIT OPENING SIZES MODELS 24-28-30

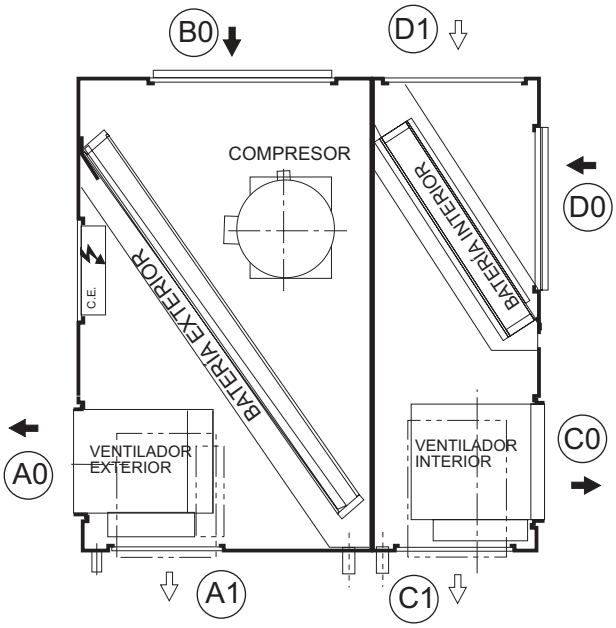

STANDARD EXECUTION

OPTIONAL EXECUTION

ELECTRICAL BOX

(*) ONLY AVAILABLE WHEN UNIT IS DELIVER ON SPLIT SYSTEM

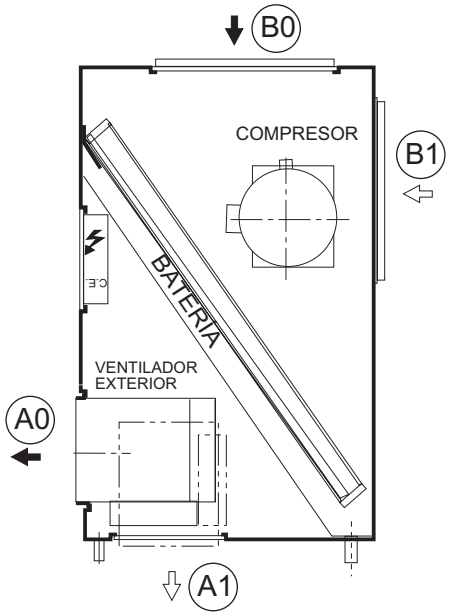

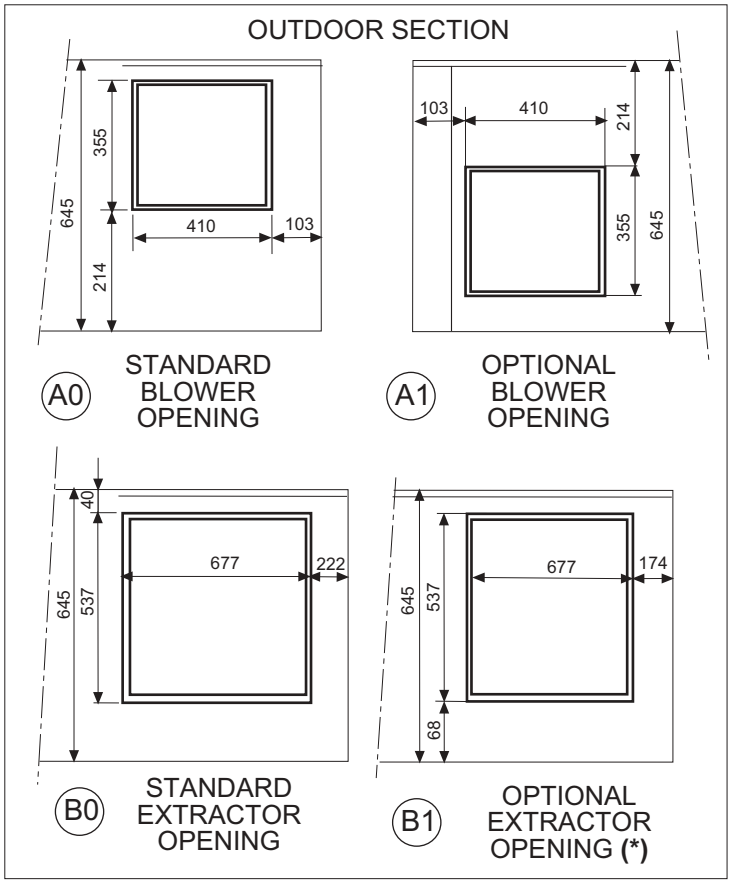

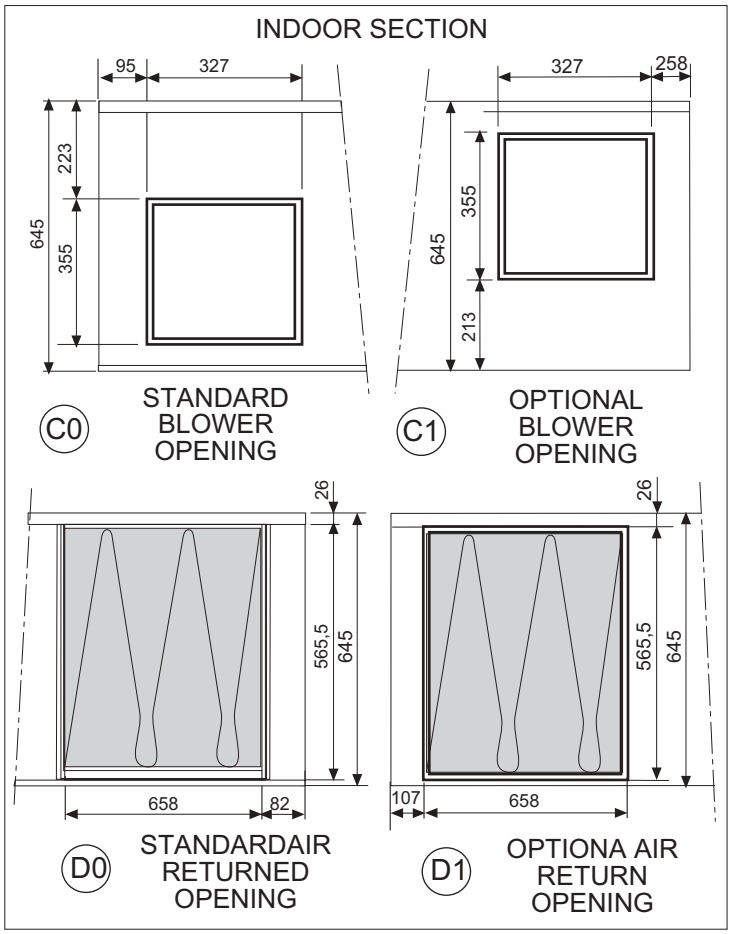

UNIT INSATALLATION

UNIT LOCATION AND WEIGHT DISTRIBUTION

The bedplate is made up of free galvanized metal channels, capable of withstanding the weight of the units wheter hung from the ceiling or mounted on the floor.

If the unit is floor mounted, then should be isolated with shock absorbing material such as anti-vibration or pads- If used, consult the weight distribution table below to make the corect selection. Keep in mind that fans rotate at approximately 850 rpm.

If the unit is hung, M-10 threated rods should be used along with shock absorbing ceiling supports.

UNIT HUNG WITH RODS

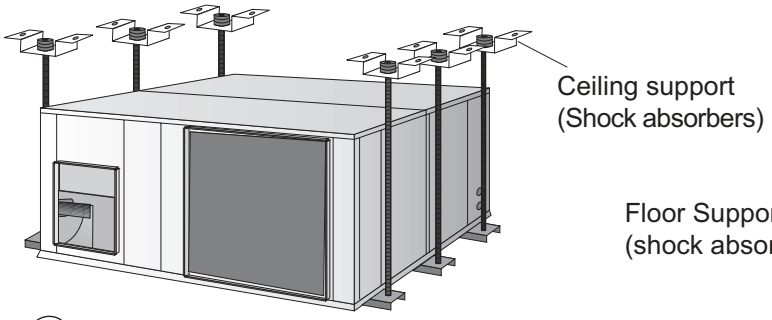

UNIT INSTALLED ON SHOCK ABSORBERS

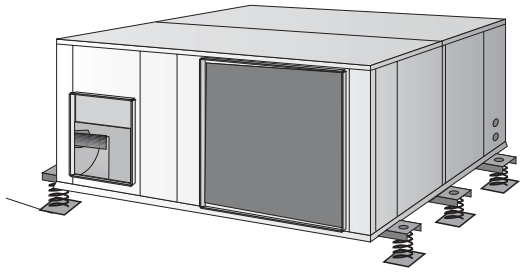

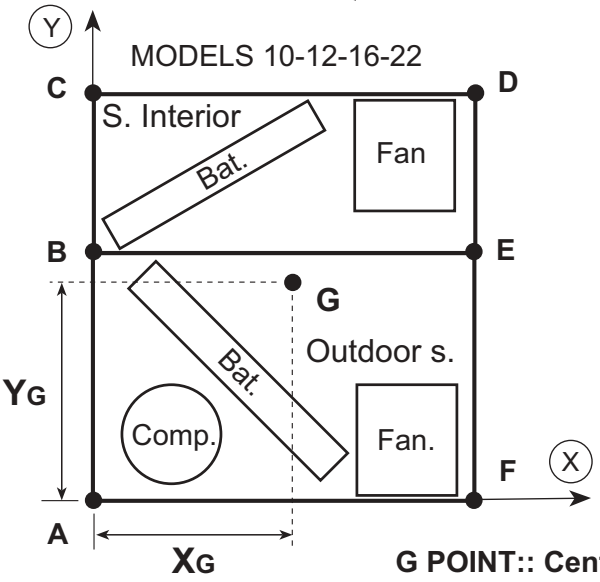

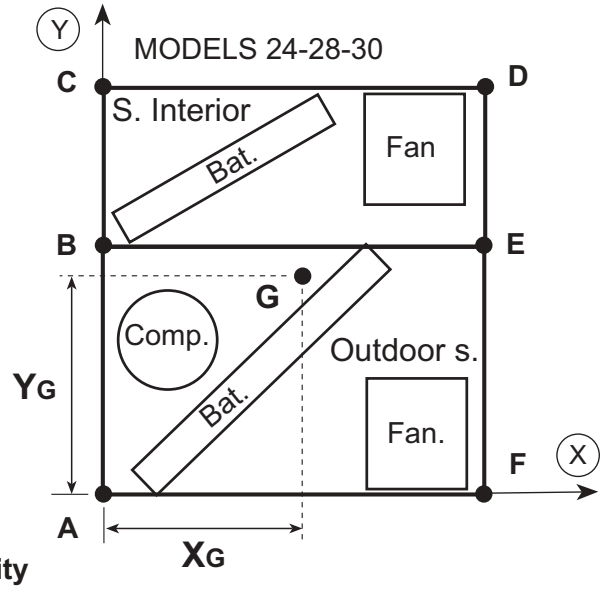

G POINT:: Center of gravity

TABLE 1:
WEIGHT DISTRIBUTION AND CENTER OF GRAVITY COORDINATES

Point / Model	DISTRIBUCION DE PESOS (Kg)							CENTER OF GRAVITY COORDINATES(G) (mm.)	
	A	**B**	**C**	**D**	**E**	**F**	**Total**	**XG**	**YG**
10	35	65	10	20	40	35	205	585	590
12	35	65	15	20	40	35	210	565	615
16	70	60	15	30	80	30	285	630	600
22	80	70	20	40	75	45	330	710	685
24	90	100	15	65	85	55	410	760	815
28	95	110	20	65	85	55	430	715	825
30	95	110	25	70	80	55	435	705	825

FREE SPACE FOR INSTALLATION

Clearance around the unit for service and maintenace.

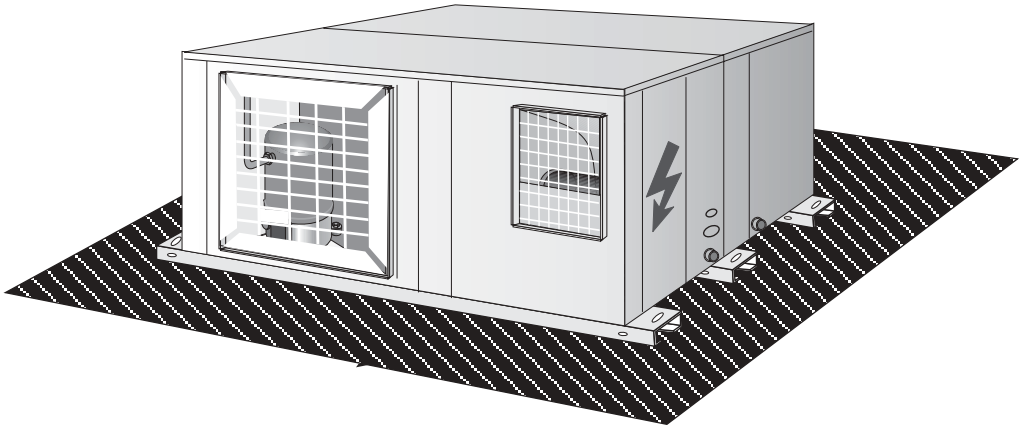

For unit with optional FREECOOLING, it should be kept in mind that the bedplate anchors cannot be used to hang the unit.
Consult others options for outdoor mounting or changes in position of the air return duct if the unit is to big.

DRAINS

All indoor sections of these units(and the outdoors section for the heat pump) have a 3/4" steel threated drain pipe welded to the condensation tray.

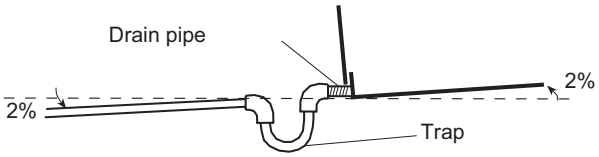

One PVC drain trap is supplied with the cooling-only units, and two with the heat pump.Connect the trap/s to the drain pipe/s on the unit and mount the drain pipe with at least a 2% incline from the trap. Also slightly tip the unit(2% toward the drainage side. Check the condensation trays are clean and free from dirt and other debris from the works and that water drains correctly.

PIPE CONNECTIONS

To determin the pipe connections between outdoor and indoor units follow data.:

A,B,C : Placement units
L : Total distance
1 = Gas pipe line
2 = Liquid pipe line

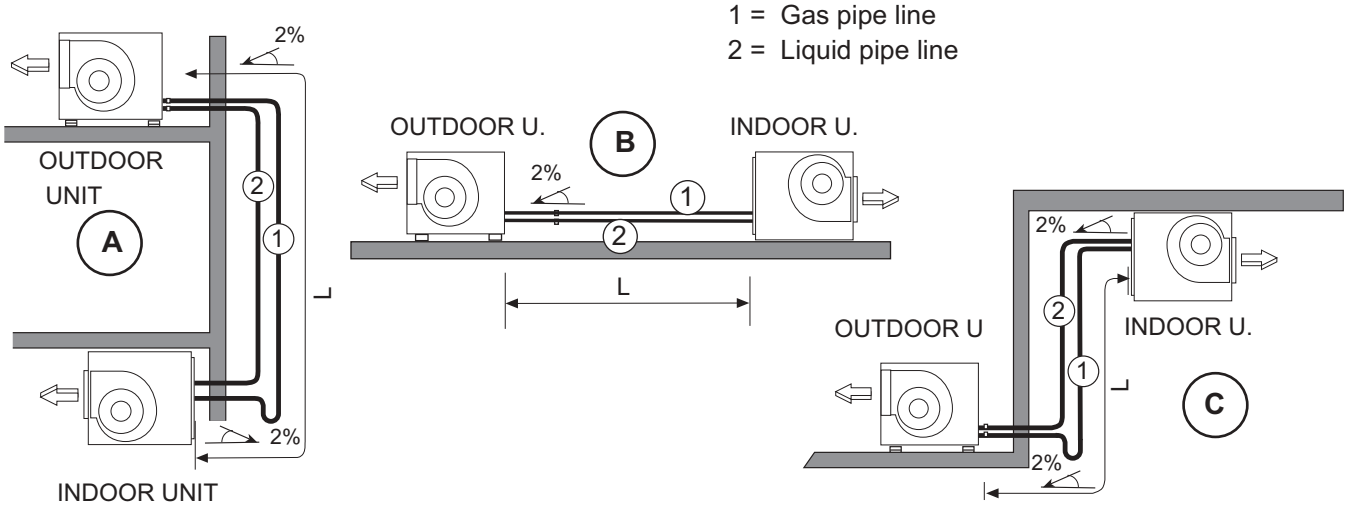

PLACEMENT **A** : In gas pipe line is necessary to install on vertical base a trap as well as a trap in the upper base each 8m. The minimum speed suction must be be below 6m/s.

PLACEMENT B: Do the cooling line pipe inclination to the outdoor unit. Pay attention in distance of more than 10 m,

PLACEMENT C : It is necessary to install on the base pipe a vertical trap. It is not necessary intermediate trap.

TABLE 2: SELECTION ON PIPE LINES

PIPE LINES			**UNIT - MODEL**						
			10	**12**	**16**	**22**	**24**	**28**	**30**
Total distancel	0 a 10 m.	∅ Líquid	3/8"	3/8"	1/2"	5/8"	5/8"	5/8"	5/8"
		∅ Gas	3/4"	3/4"	7/8"	7/8"	11/8"	11/8"	11/8"
	10 a 30 m.	∅ Líquid	3/8"	3/8"	5/8"	5/8"	5/8"	5/8"	3/4"
		∅ Gas	7/8"	7/8"	7/8"	11/8"	11/8"	11/8"	13/8"
	30 a 50 m. ⚠	∅ Líquid	1/2"	1/2"	5/8"	5/8"	3/4"	3/4"	3/4"
		∅ Gas	7/8"	7/8"	11/8"	11/8"	13/8"	13/8"	13/8"
Unit connections		∅ Líquid	3/8"	3/8"	1/2"	5/8"	5/8"	5/8"	5/8"
		∅ Gas	3/4"	3/4"	7/8"	7/8"	11/8"	11/8"	11/8"
Maximum distance vertical (m.)			15	15	15	15	15	15	15
Number of curves maximum			12	12	12	12	12	12	12

- IN EACH CASE THE GAS PIPE MUST BE ISOLATED
- THE HORIZONTAL PIPE MUST HAVE AN INCLINATION OF 2% TO THE OUTDOOR UNIT
- THE MAXIMUM SPEED ON LINE CAN BE SUPERIOR OF 15 m/seg.

⚠ Between length of 30 and 50 m superior you have to make a recalculation according to our technical commercial department or distribution itself to mantain determinated aspects how to make the installation(additional charge of oil, selenoide valves etc...

ELECTRICAL CONNECTIONS

① Electrical supply .
② Connection indoor / outdoor unit
③ Electrical heater supply
④ Connection thermostat control

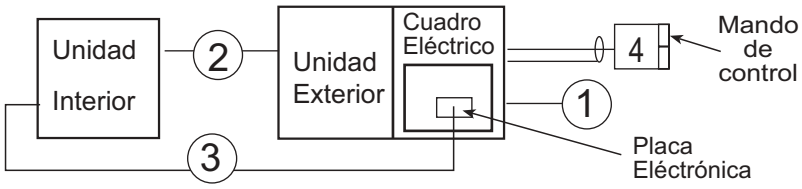

UNIT SUPPLY MONOFHASE

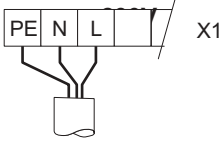

1N ~ 230V - 50 Hz + PE

UNIT MODEL	Nº OF CABLES X SECTION (mm²)				
	① Electrical supply	① Electrical heater supply	② Interconnection between indoor and outdor unit	③ Electrical heater supply	④ **Cable**
10	3 x 4	3 x 16	5 x 1,5	3 x 4 + 2 x 1	2 x 1

UNIT SUPPLY TRIFAPHASES 230V

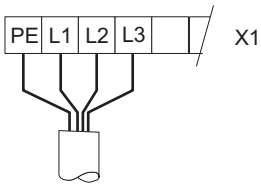

3 ~ 230V - 50 Hz + PE

UNIT MODEL	Nº OF CABLES X SECTION (mm²)				
	① Electrical supply	① Electrical heater supply	② Interconnection between indoor and outdoor unit	③ Electrical heater supply	④ **Cable**
10	4 x 4	4 x 10	5 x 1,5	4 x 4 + 2 x 1	2 x 1
12	4 x 4	4 x 10	5 x 1,5	4 x 4 + 2 x 1	2 x 1
16	4 x 6	4 x 16	4 x 2,5 + 2 x 1	4 x 4 + 2 x 1	2 x 1
22	4 x 10	4 x 16	4 x 2,5 + 2 x 1	4 x 4 + 2 x 1	2 x 1
24	4 x 10	4 x 25	4 x 2,5 + 2 x 1	4 x 4 + 2 x 1	2 x 1
28	4 x 10	4 x 25	4 x 2,5 + 2 x 1	4 x 4 + 2 x 1	2 x 1
30	4 x 16	4 x 25	4 x 2,5 + 2 x 1	4 x 4 + 2 x 1	2 x 1

UNIT SUPPLY TRIFHASES 400V

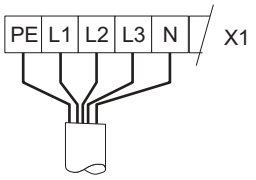

3N ~ 400V - 50 Hz + PE

UNIT MODEL	Nº OF CABLES X SECTIÓN (mm²)				
	① Alimentación sin batería eléctrica	① Alimentación con batería eléctrica	② Interconexión entre unidades sin batería eléctrica	③ Alimentación batería eléctrica	④ **Cable Apantallado**
10	5 x 2,5	5 x 4	5 x 1,5	4 x 1,5 + 2 x 1	2 x 1
12	5 x 2,5	5 x 4	5 x 1,5	4 x 1,5 + 2 x 1	2 x 1
16	5 x 4	5 x 6	4 x 1,5 + 2 x 1	4 x 1,5 + 2 x 1	2 x 1
22	5 x 4	5 x 10	4 x 1,5 + 2 x 1	4 x 1,5 + 2 x 1	2 x 1
24	5 x 4	5 x 10	4 x 1,5 + 2 x 1	4 x 1,5 + 2 x 1	2 x 1
28	5 x 4	5 x 10	4 x 1,5 + 2 x 1	4 x 1,5 + 2 x 1	2 x 1
30	5 x 6	5 x 10	4 x 1,5 + 2 x 1	4 x 1,5 + 2 x 1	2 x 1

The sections have been calculated for a lengh no longer than 50m and a voltage drop of 10V.

FUNCTION LIMIT OF VOLTAGE

MODELS	VOLTAGE	LIMIT
10	230 V-1Ph-50Hz	198-264 V -1Ph- 50Hz
10-12-16-22	230 V-3Ph-50Hz	180-242 V -3Ph- 50Hz
	400 V-3Ph-50Hz	342-462 V -3Ph- 50Hz
24-28-30	230 V-3Ph-50Hz	198-264 V -3Ph- 50Hz
	400 V-3Ph-50Hz	342-462 V -3Ph- 50Hz

OPERATING LIMITS

OPERATING LIMITS FOR (COOLING ONLY) UNITS

		MAXIMUM TEMPERATURES	MINIMUM TEMPERATURE
COOLING CYCLE OPERATION	INDOOR TEMPERATURE	32º C BS / 23ºC BH	21º C BS / 15ºC BH
	OUTDOOR TEMPERATURE	DEPENDING ON MODEL (TABLA 1)	0º C (MODELS 22/24/28/30) 19º C (MODELS 10/12/16) (*)

(*) With condensation pressure control (optional) 0ºC minimum outdoor operating temperture

OPERATING LIMITS FOR(HEATING PUMP) UNITS LIMITES DE FUNCIONAMIENTO UNIDADES (BOMBA DE CALOR)

		MAXIMUM TEMPERATURE	MINIMUM TEMPERATURE
COOLING CYCLE OPERATION	INDOOR TEMPERATURE	32º C BS / 23ºC BH	21º C BS / 15ºC BH
	OUTDOOR TEMPERATURE	DEPENDING MODELS (TABLA 1)	0º C (MODELS 22/24/28/30) 19º C (MODELS 10/12/16) (*)
HEATING CYCLE OPERATION	INDOOR TEMPERATURE	27º C BS	21º C BS / 15ºC BH
	OUTDOOR TEMPERATURE	24º C BS / 18ºC BH	-10º C BS / -11ºC BH

(*) With condensation pressure control(optional) 0ºC minimum outdoor operating temperature

BS.- Dry bulb temperature
BH.- Wet bulb temperature

TABLE 1-COOLING CYCLE MAXIMUM OUTDOOR OPERATING TEMPERATURES.

MODELS WITH REFRIGERANT R-407C

MODELS	10	12	16	22	24	28	30
Rated outdoor flow	45	43	44	45	46	42	41
Minimum outdoor flow	43	43	41	41	42	39	38

MODELS WITH REFRIGERANT R-22

MODELS	10	12	16	22	24	28	30
Rated outdoor flow	48	48	47	48	48	46	44
Minimum outdoor flow	46	45	45	46	44	42	40

OPTIONS

ELECTRIC HEATER

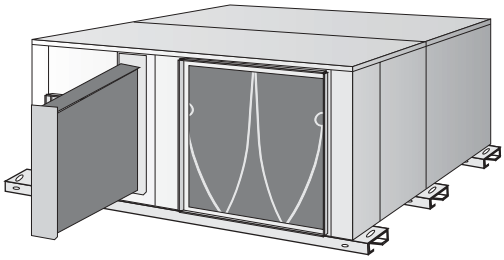

Optionally, these units can contain shielded element electricaq heating batteries that are mounted on the inside of the unit in schematic opposite.
The elevtric heater must get its power from the unit´s electrical box

MAIN SWITCH

The main switch is located on the access panel to the electrical box in such a way that the unit is disconnected when the panel is opened.
(Refer to the size diagram a pages 7 to 10 to see the position of the electrical box access panel)
Check to make sure that the main switch is large enough to handle the current for the unit if electric heaters are installed.

PHASE SEQUENCER (THREE-PHASE UNIT)

The phase sequencer is located in the electrical box in the outdoor section, thus assuring that the unit will not gegin operation while the phase connection of the compressor is not correct. Should this ocuur, then just switch two phase connections.

ON/OFF CONDENSATION PRESSURE CONTROL

CONSISTS OF A PRESSURE SWITCH, WHICH STATRS AND STOP THE OUTDOOR FAN REGULATING THE CONDENSATION TEMPERATURE, THUS THE UNIT WILL BE TO OPERATE IN THE COOLING CYCLE WHEN THE OUTDOOR TEMPERATURE IS BELOW 19ºC

HOT GAS BY PASS VALVE

The purpose of the bypass valve is to make it possible for the unit to operate at low outdoor temperatures(under 0ºC) to be used in cooling only and heat pump units.
It regulates the capacity of the compressor by injecting hot gas from the compressor discharge side to the evaporator.

CONTROL USING A PROGRAMABLE CONTROLLER.

With the programable controller option, the desired temperarure can be programmed in the area 24 Hours a day 7 days a week

REMOTE ROOM-TEMPERATURE SENSOR

This sensor may be used in conjunction with remote controller, aloowing the controller to be mounted in a room away from the conditionned space.
- REMOTE DUCT SENSOR: **The sensor will be located in the return air duct, detecting the air temperature of the air being conditionned.**
- REMOTE ROOM-TEMPERATURE SENSOR: The sensor will be placed in the area to be air conditionned.

KIT FREECOLING TERMOSTAT KIT

The free cooling Thermostat kit will only operate in cooling only or heat pump units. This is an energy saving system that regulates the dampers doors through wich outdoor air is taken in when the outdoor temperature is lower than the area to be air conditionned.
This kit consists of the damper, a motor, power card and controller with specific programming, safety thermostat for air discharge and outdoor sensor, completely factory-assembled.

QQQQQ

OPTIONALS

CRANK CASE COOLING ONLY UNITS

When the unit is operating at low outdoor temperatures it is advisable to fit a crankcase heater. The purpose of the heater is to keeep the oil in the compressor at the correct temperature while the compressor is stopped so that it can be properly lubricated when started again

SOUND MUFFLER

Available for models 16, 22, 24, 28, 30,

Field assembled, designed to be installed at the extractor opening of the outdoor unit in order to reduce noise, partically when the outdoor unit is installed without ducts free discharge.

This kit contains the sound muffler and adapter parts for fixing it to the unit.

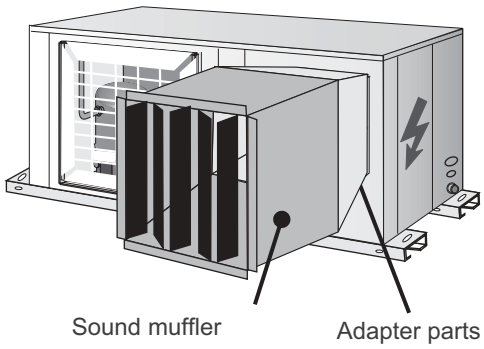

DROP CHARGE EXTERNAL AIR FILTER

	MODELOS						
	10	**12**	**16**	**22**	**24**	**28**	**30**
Caudal nominal	30 Pa	30 Pa	30 Pa	30 Pa	30 Pa	30 Pa	30 Pa
Caudal mínimo	25 Pa	25 Pa	25 Pa	25 Pa	25 Pa	25 Pa	25 Pa
Presión máxima disponible con caudales mínimos	75 Pa	65 Pa	95 Pa	125 Pa	145 Pa	95 Pa	75 Pa

OUTDOOR MOUNTING KIT

Field assembly.

This kit is comprised of an air filter and grille for outdoor air intake which should be installed on the suction side of the outdoor unit, and anti-rain hood which should be installed on the discharge side of the outdoor fan.

OUTDOOR AIR FILTER KIT

Field assembly.

The outdoor air filter should be installed on the outdoor air inlet of the outdoor unit and is recommended when working in heavily contaminated area thta may soil or clog the outdoor coil

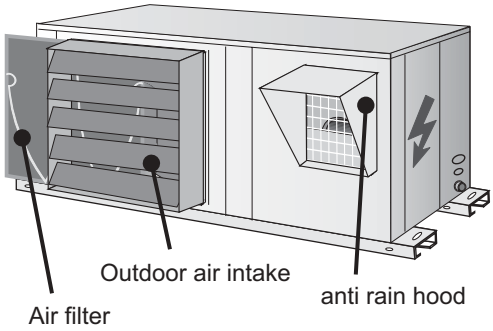

ADDITIONAL DROP CHARGE FOR SOUND LEVEL (OPTIONAL)

	MODELS				
	16	**22**	**24**	**28**	**30**
Nominal flow	25 Pa	60 Pa	80 Pa	75 Pa	75 Pa
Minimum flow	20 Pa	45 Pa	70 Pa	60 Pa	60 Pa
Max. available pressure for minimum flow	95 Pa	90 Pa	95 Pa	45 Pa	25 Pa

ADDITIONAL DROP CHARGE FOR SOUND MUFFLER (OPTIONAL) + OUTDOOR AIR FILTER (OPTIONAL)

	MODELS				
	16	**22**	**24**	**28**	**30**
Nominal flow	55 Pa	90 Pa	110 Pa	105 Pa	105 Pa
minimum flow	40 Pa	70 Pa	95 Pa	85 Pa	85 Pa
Max.available pressure for minimum flow	65 Pa	45 Pa	25 Pa	20 Pa	0 Pa

BELGIUM :
LENNOX BENELUX N.V./S.A.
tél. : + 32 3 633 30 45
fax : + 32 3 633 00 89
e-mail : info.be@lennoxbenelux.com

CZECH REPUBLIC :
LENNOX JANKA
tél. : + 420 2 510 88 111
fax : + 420 2 579 10 393
e-mail : janka@janka.cz

FRANCE :
LENNOX FRANCE
tél. : + 33 4 72 23 20 20
fax : + 33 4 78 20 07 76
e-mail : accueil@lennoxfrance.com

GERMANY :
LENNOX DEUTSCHLAND GmbH
tél. : + 49 69 42 09 79 0
fax : + 49 69 42 09 79 40
e-mail : info.de@lennoxdeutschland.com

MIDDLE EAST :
LENNOX DISTRIBUTION
tél. : + 971 4 262 9309
fax : + 971 4 266 7082
e-fax : + 1 240 368 73 62
Mobile : 971 50 4510669
e-mail : mmrifal@emirates.net.ae

NETHERLANDS :
LENNOX BENELUX B.V.
tél. : + 31 33 2471 800
fax : + 31 33 2459 220
e-mail : info@lennoxbenelux.com

POLAND :
LENNOX POLSKA Sp. z o. o.
tél. : + 48 22 832 26 61
fax : + 48 22 832 26 62
e-mail : info@lennoxpolska.pl

PORTUGAL :
LENNOX CLIMATIZAÇAO LDA.
tél. : +351 22 999 84 60
fax : +351 22 999 84 68
e-mail : info@lennoxportugal.com

RUSSIA :
LENNOX DISTRIBUTION MOSCOW
tél. : + 7 095 246 07 46
fax : + 7 502 933 29 55
e-mail : lennox.dist.moscow@mtu-net.ru

SLOVAKIA :
LENNOX SLOVAKIA
tél. : + 421 2 44 87 19 27
fax : + 421 2 44 88 64 72

SPAIN :
LENNOX REFAC S.A.
tél. : + 34 915 40 18 10
fax : + 34 915 42 84 04
e-mail : marketing@lennox-refac.com

UKRAINE :
LENNOX DISTRIBUTION KIEV
tél. : + 380 44 213 14 21
fax : + 380 44 213 14 21
e-mail : jankauk@uct.kiev.ua

UNITED KINGDOM :
LENNOX INDUSTRIES LTD
tél. : + 44 1604 599400
fax : + 44 1604 594200
e-mail : marketing@lennoxind.com

OTHER EUROPEAN COUNTRIES, AFRICA, LENNOX DISTRIBUTION :
tél. : + 33 4 72 23 20 14
fax : + 33 4 72 23 20 28
e-mail : marketing@lennoxdist.com

LENNOX®

www.Lennoxeurope.com

MSL60S-0701 07-2001